Changes for the Better

MITSUBISHI ELECTRIC

SPLIT-TYPE, HEAT PUMP AIR CONDITIONERS
SPLIT-TYPE, AIR CONDITIONERS

April 2009
No.OC369
REVISED EDITION-D

SERVICE MANUAL

Series PKA Wall Mounted R410A

Indoor unit [Model names]	[Service Ref.]		
PKA-A12GA	PKA-A12GA	PKA-A12GA1	PKA-A12GA2
PKA-A18GA	PKA-A18GA	PKA-A18GA1	PKA-A18GA2
PKA-A24FA	PKA-A24FA	PKA-A24FA1	PKA-A24FA2
PKA-A30FA	PKA-A30FA	PKA-A30FA1	PKA-A30FA2
PKA-A36FA	PKA-A36FA	PKA-A36FA1	PKA-A36FA2
PKA-A12GAL	PKA-A12GAL	PKA-A12GAL1	PKA-A12GAL2
PKA-A18GAL	PKA-A18GAL	PKA-A18GAL1	PKA-A18GAL2
PKA-A24FAL	PKA-A24FAL	PKA-A24FAL1	PKA-A24FAL2
PKA-A30FAL	PKA-A30FAL	PKA-A30FAL1	PKA-A30FAL2
PKA-A36FAL	PKA-A36FAL	PKA-A36FAL1	PKA-A36FAL2

Revision:
- "14. RoHS PARTS LIST" has been modified.

- Please void OC369 REVISED EDTION-C.

NOTE:
- This manual describes only service data of the indoor units.
- RoHS compliant products have <G> mark on the spec name plate.
- For servicing RoHS compliant products, refer to the RoHS PARTS LIST.

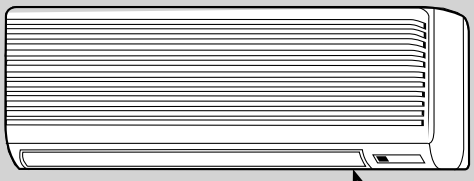

Indoor unit
PKA-A12GA PKA-A18GA
PKA-A12GAL PKA-A18GAL

Model name indication

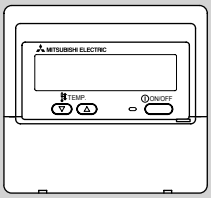

WIRED REMOTE CONTROLLER

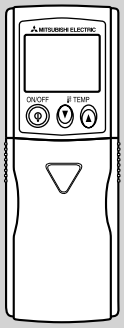

WIRELESS REMOTE CONTROLLER

CONTENTS

1. TECHNICAL CHANGES 2
2. REFERENCE MANUAL 2
3. SAFETY PRECAUTION 3
4. PART NAMES AND FUNCTIONS 5
5. SPECIFICATIONS 9
6. NOISE CRITERION CURVES 11
7. OUTLINES AND DIMENSIONS 12
8. WIRING DIAGRAM 15
9. REFRIGERANT SYSTEM DIAGRAM 19
10. TROUBLE SHOOTING 20
11. SPECIAL FUNCTION 35
12. DISASSEMBLY PROCEDURE 38
13. PARTS LIST 44
14. RoHS PARTS LIST 53

INTERTEK ETL LISTED C US 33223

Mr.SLIM™

Revision :

"14. RoHS PARTS LIST" has been modified on page 53.

Page	Revise point	Service Ref.	Incorrect	Correct
53	STRUCTUAL PARTS No. 2 CORNER COVER	PKA-A12/18GA(L) PKA-A12/18GA(L)$_1$ PKA-A12/18GA(L)$_2$	R01 10Y 658	R01 08Y 658
	STRUCTUAL PARTS No. 11 CORNER COVER		R01 08Y 658	R01 10Y 658

1 TECHNICAL CHANGES

PKA-A12GA$_1$ ➔ PKA-A12GA$_2$
PKA-A18GA$_1$ ➔ PKA-A18GA$_2$
PKA-A24FA$_1$ ➔ PKA-A24FA$_2$
PKA-A30FA$_1$ ➔ PKA-A30FA$_2$
PKA-A36FA$_1$ ➔ PKA-A36FA$_2$
PKA-A12GAL$_1$ ➔ PKA-A12GAL$_2$
PKA-A18GAL$_1$ ➔ PKA-A18GAL$_2$
PKA-A24FAL$_1$ ➔ PKA-A24FAL$_2$
PKA-A30FAL$_1$ ➔ PKA-A30FAL$_2$
PKA-A36FAL$_1$ ➔ PKA-A36FAL$_2$

• Indoor controller board (I.B) has been changed (11. SPECIAL FUNCTION is added).

PKA-A12GA ➔ PKA-A12GA$_1$
PKA-A18GA ➔ PKA-A18GA$_1$
PKA-A24FA ➔ PKA-A24FA$_1$
PKA-A30FA ➔ PKA-A30FA$_1$
PKA-A36FA ➔ PKA-A36FA$_1$
PKA-A12GAL ➔ PKA-A12GAL$_1$
PKA-A18GAL ➔ PKA-A18GAL$_1$
PKA-A24FAL ➔ PKA-A24FAL$_1$
PKA-A30FAL ➔ PKA-A30FAL$_1$
PKA-A36FAL ➔ PKA-A36FAL$_1$

• Indoor controller board (I.B) has been changed.

2 REFERENCE MANUAL

2-1. OUTDOOR UNIT SERVICE MANUAL

Service Ref.	Service Manual No.
PUZ-A18/24/30/36/42NHA PUZ-A18/24/30/36/42NHA-BS PUY-A12/18/24/30/36/42NHA$_{(1)}$ PUY-A12/18/24/30/36/42NHA$_{(1)}$-BS	OC367
PUZ-HA36NHA	OCH426 OCB426

2-2. TECHNICAL DATA BOOK

Series (Outdoor unit)	Data Book No.
PUZ-A·NHA(-BS) PUY-A·NHA(-BS)	OCS04
PUZ-HA36NHA	OCS12

3 SAFETY PRECAUTION

3-1. ALWAYS OBSERVE FOR SAFETY

Before obtaining access to terminals, all supply circuits must be disconnected.

3-2. CAUTIONS RELATED TO NEW REFRIGERANT

Cautions for units utilizing refrigerant R410A

Use new refrigerant pipes.

Make sure that the inside and outside of refrigerant piping is clean and it has no contamination such as sulfur hazardous for use, oxides, dirt, shaving particles, etc.
In addition, use pipes with specified thickness.

Contamination inside refrigerant piping can cause deterioration of refrigerant oil etc.

Store the piping to be used indoors during installation and both ends of the piping sealed until just before brazing. (Leave elbow joints, etc. in their packaging.)

If dirt, dust or moisture enters into refrigerant cycle, that can cause deterioration of refrigerant oil or malfunction of compressor.

Use ester oil, ether oil or alkylbenzene oil (small amount) as the refrigerant oil applied to flares and flange connections.

If large amount of mineral oil enters, that can cause deterioration of refrigerant oil etc.

Charge refrigerant from liquid phase of gas cylinder.

If the refrigerant is charged from gas phase, composition change may occur in refrigerant and the efficiency will be lowered.

Do not use refrigerant other than R410A.

If other refrigerant (R22 etc.) is used, chlorine in refrigerant can cause deterioration of refrigerant oil etc.

Use a vacuum pump with a reverse flow check valve.

Vacuum pump oil may flow back into refrigerant cycle and that can cause deterioration of refrigerant oil etc.

Use the following tools specifically designed for use with R410A refrigerant.

The following tools are necessary to use R410A refrigerant.

Tools for R410A	
Gauge manifold	Flare tool
Charge hose	Size adjustment gauge
Gas leak detector	Vacuum pump adaptor
Torque wrench	Electronic refrigerant charging scale

Handle tools with care.

If dirt, dust or moisture enters into refrigerant cycle, that can cause deterioration of refrigerant oil or malfunction of compressor.

Do not use a charging cylinder.

If a charging cylinder is used, the composition of refrigerant will change and the efficiency will be lowered.

Ventilate the room if refrigerant leaks during operation. If refrigerant comes into contact with a flame, poisonous gases will be released.

[1] Cautions for service

(1) Perform service after recovering the refrigerant left in unit completely.
(2) Do not release refrigerant in the air.
(3) After completing service, charge the cycle with specified amount of refrigerant.
(4) When performing service, install a filter drier simultaneously.
Be sure to use a filter drier for new refrigerant.

[2] Additional refrigerant charge

When charging directly from cylinder

· Check that cylinder for R410A on the market is syphon type.

· Charging should be performed with the cylinder of syphon stood vertically. (Refrigerant is charged from liquid phase.)

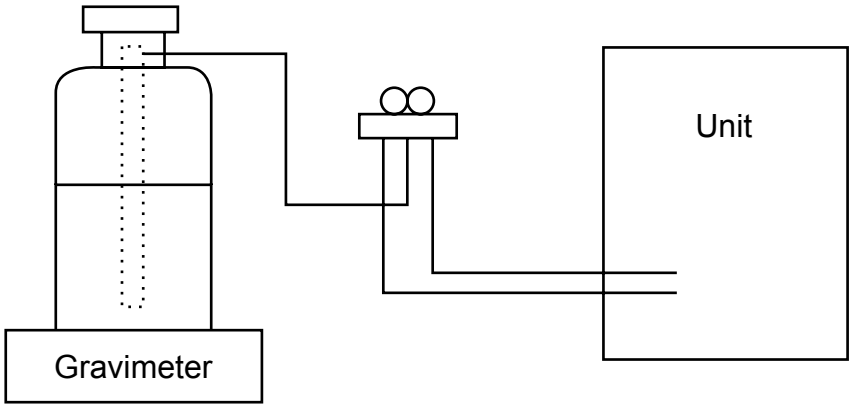

[3] Service tools

Use the below service tools as exclusive tools for R410A refrigerant.

No.	Tool name	Specifications
①	Gauge manifold	· Only for R410A
		· Use the existing fitting specifications. (UNF1/2)
		· Use high-tension side pressure of 5.3MPa·G or over.
②	Charge hose	· Only for R410A
		· Use pressure performance of 5.09MPa·G or over.
③	Electronic scale	——
④	Gas leak detector	· Use the detector for R134a, R407C or R410A.
⑤	Adaptor for reverse flow check	· Attach on vacuum pump.
⑥	Refrigerant charge base	——
⑦	Refrigerant cylinder	· Only for R410A · Top of cylinder (Pink) · Cylinder with syphon
⑧	Refrigerant recovery equipment	——

4 PART NAMES AND FUNCTIONS

● **Indoor Unit**

PKA-A12GA
PKA-A18GA
PKA-A12GAL
PKA-A18GAL
PKA-A12GA1
PKA-A18GA1
PKA-A12GAL1
PKA-A18GAL1
PKA-A12GA2
PKA-A18GA2
PKA-A12GAL2
PKA-A18GAL2

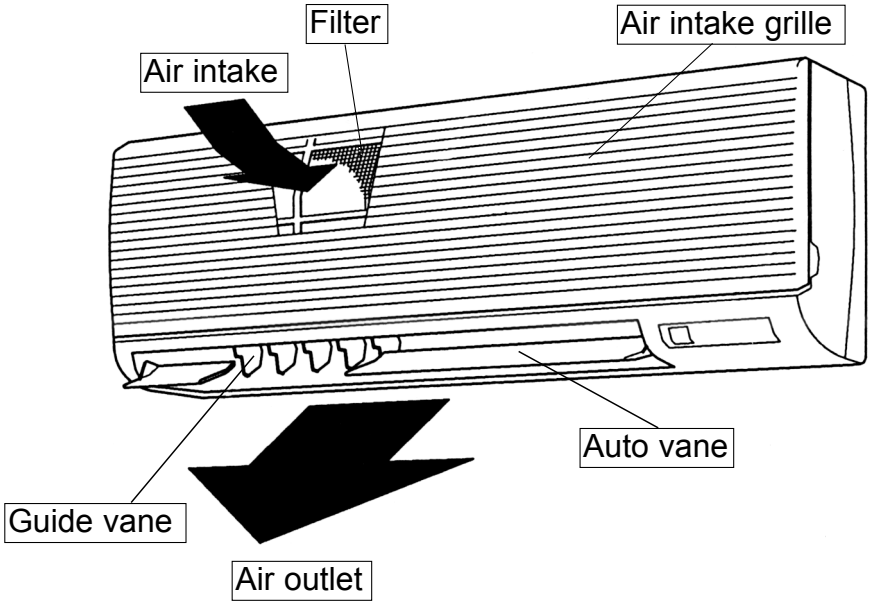

● **Indoor Unit**

PKA-A24FA
PKA-A30FA
PKA-A36FA
PKA-A24FAL
PKA-A30FAL
PKA-A36FAL
PKA-A24FA1
PKA-A30FA1
PKA-A36FA1
PKA-A24FAL1
PKA-A30FAL1
PKA-A36FAL1
PKA-A24FA2
PKA-A30FA2
PKA-A36FA2
PKA-A24FAL2
PKA-A30FAL2
PKA-A36FAL2

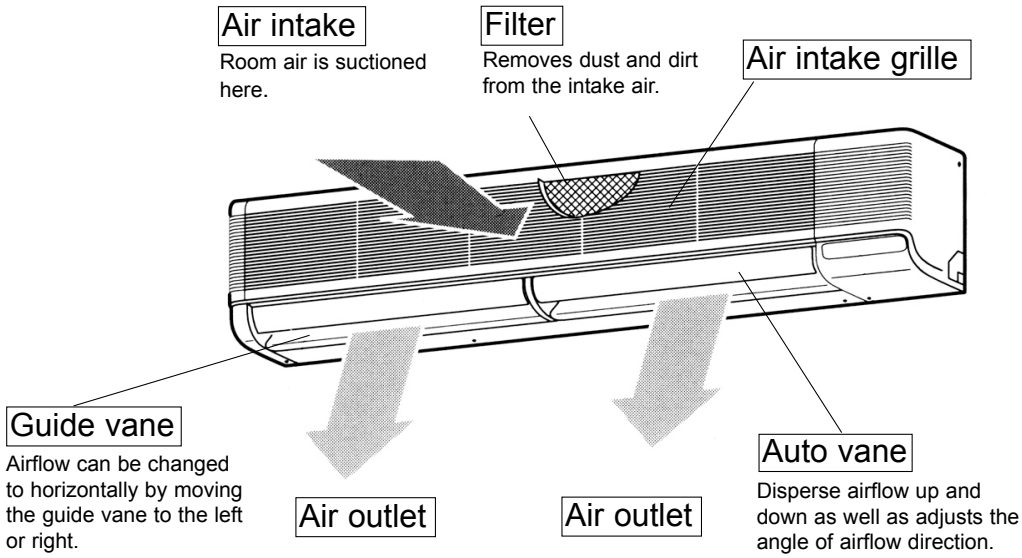

● Wired remote controller

Once the controllers are set, the same operation mode can be repeated by simply pressing the ON/OFF button.

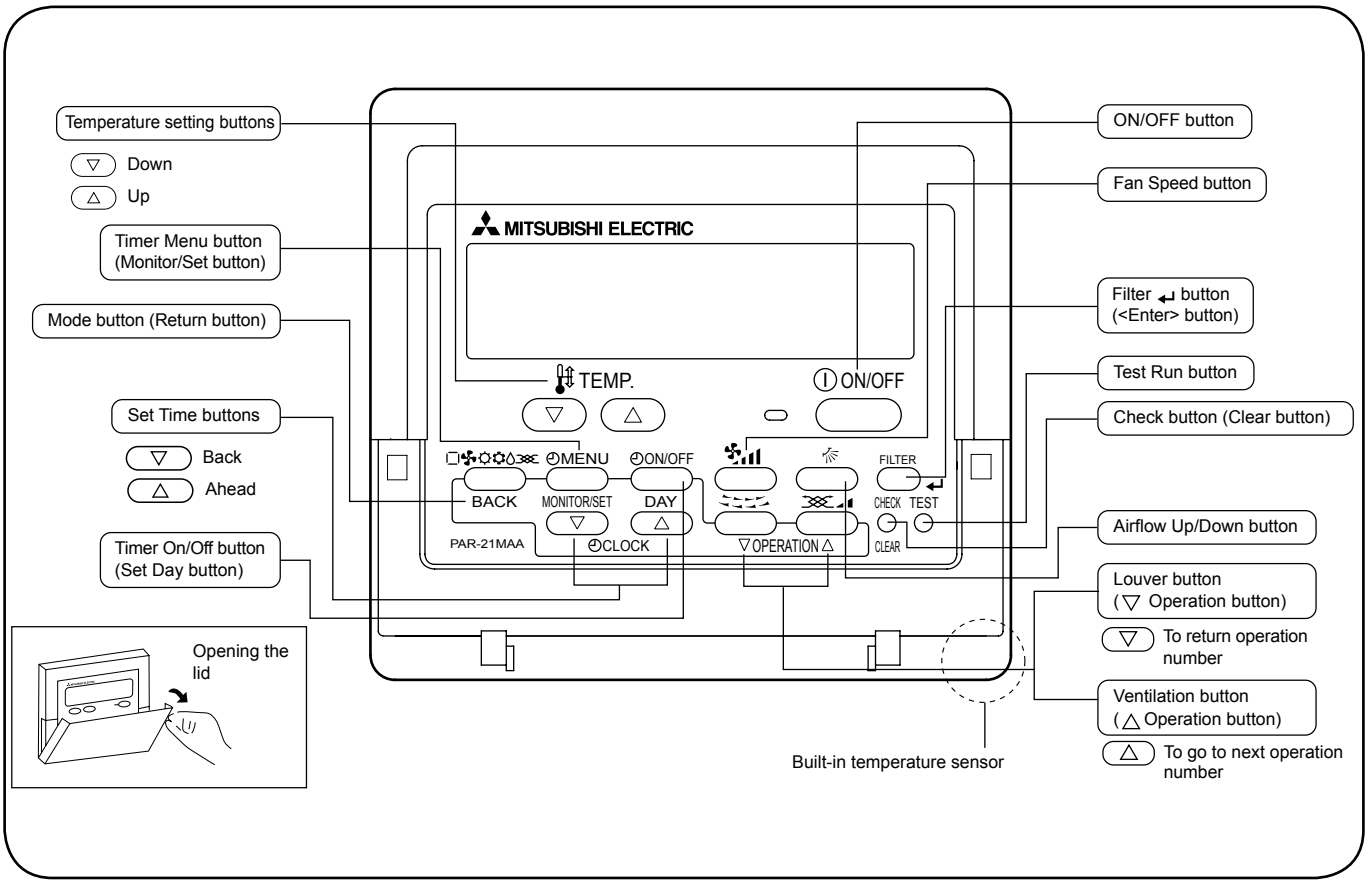

● Wired remote controller

Display Section

For purposes of this explanation, all parts of the display are shown as lit. During actual operation, only the relevant items will be lit.

Day-of-Week
Shows the current day of the week.

Time/Timer Display
Shows the current time, unless the simple or Auto Off timer is set.
If the simple or Auto Off timer is set, the time to be switched off is shown.

Identifies the current operation
Shows the operating mode, etc.
*Multilanguage display is available.

"Centrally Controlled" indicator
Indicates that operation from the remote controller has been prohibited by a master controller.

"Timer is Off" indicator
Indicates that the timer is off.

Temperature Setting
Shows the target temperature.

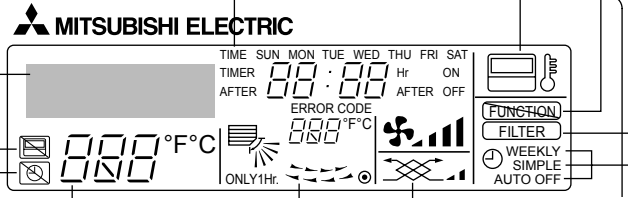

Up/Down Air Direction indicator
The indicator ╲ shows the direction of the outcoming airflow.

"One Hour Only" indicator
Displayed if the airflow is set to low or downward during COOL or DRY mode. (Operation varies according to model.)
The indicator goes off in 1 hour, when the airflow direction also changes.

Room Temperature display
Shows the room temperature. The room temperature display range is 46–102°F. The display blinks if the temperature is less than 46°F or 102°F or more.

Louver display
Indicates the action of the swing louver. Does not appear if the louver is not running.

◉ (Power On indicator)
Indicates that the power is on.

"Sensor" indication
Displayed when the remote controller sensor is used.

"Locked" indicator
Indicates that remote controller buttons have been locked.

"Clean The Filter" indicator
To be displayed on when it is time to clean the filter.

Timer indicators
The indicator comes on if the corresponding timer is set.

Fan Speed indicator
Shows the selected fan speed.

Ventilation indicator
Appears when the unit is running in Ventilation mode.

Note:
- "PLEASE WAIT" message
  This message is displayed for approximately 3 minutes when power is supplied to the indoor unit or when the unit is recovering from a power failure.
- "NOT AVAILABLE" message
  This message is displayed if an invalid button is pressed (to operate a function that the indoor unit does not have).
  If a single remote controller is used to operate multiple indoor units simultaneously that are different types, this message will not be displayed as far as any of the indoor units is equipped with the function.

● Wireless remote controller

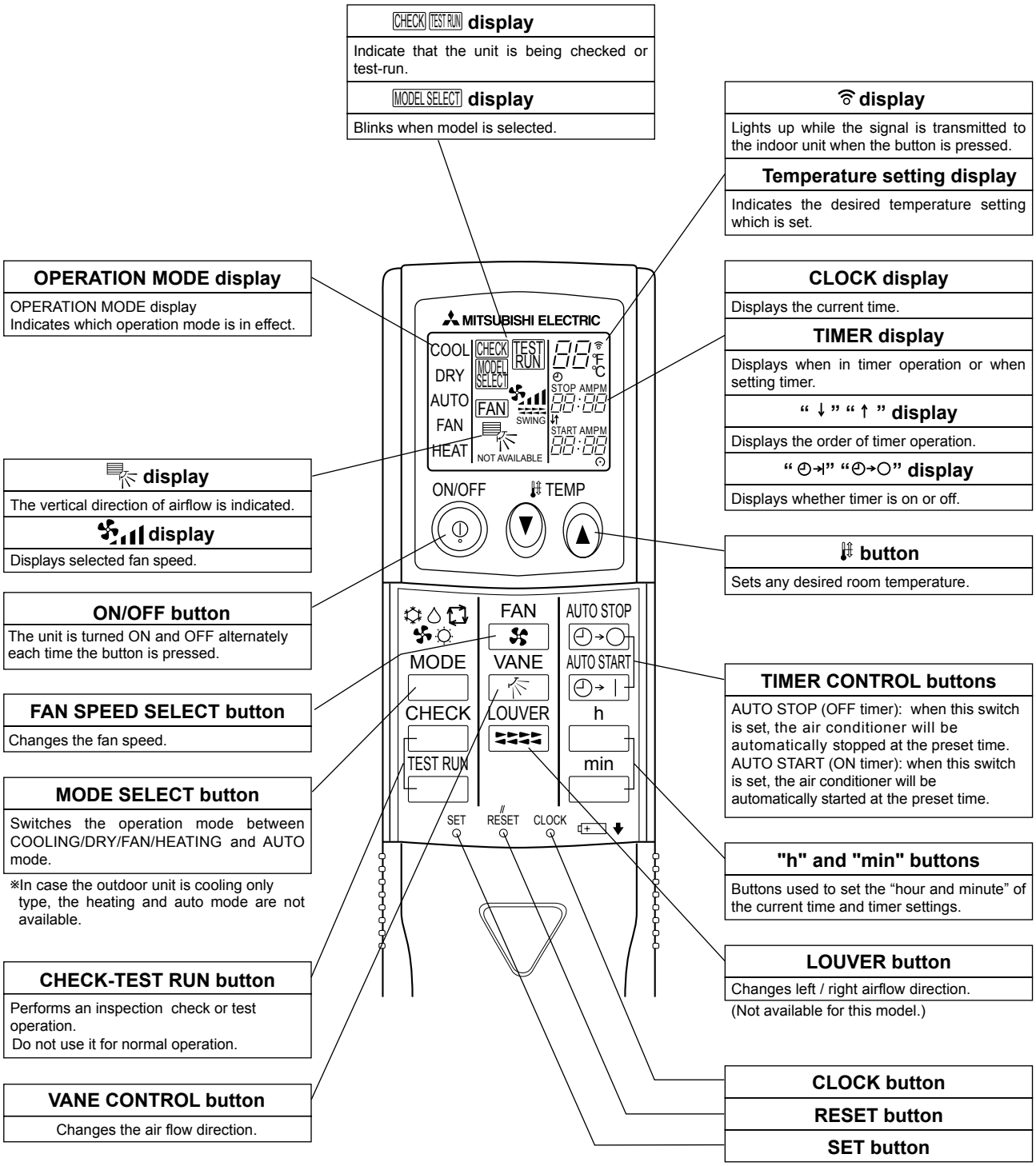

5 SPECIFICATIONS

INDOOR UNIT	**Service Ref.**			**PKA-A12GA(1)(2) / PKA-A12GAL(1)(2)**
	Power supply(phase, cycle, voltage)			Single phase, 60Hz, 208/230V
		Max. Fuse Size	A	15
		Min. Circuit Ampacity	A	1
	External finish			Munsell 0.70Y 8.59/0.97
	Heat exchanger			Plate fin coil
	Fan	Fan(drive) × No.		Line flow (direct) × 1
		Fan motor output	kW	0.030
		Fan motor	F.L.A	0.33
		Airflow(Low-Medium2-Medium1-High)	m³/min(CFM)	Dry: 9-10-11-12(320-350-390-425)
				Wet:8-9-10-11(290-315-350-380)
		External static pressure	Pa(mmAq)	0(direct blow)
	Operation control & Thermostat			GA: Wired remote controller & built-in GAL: Wireless remote controller & built-in
	Noise level(Low-Medium2-Medium1-High)		dB	36-38-41-43
	Field drain pipe I.D.		mm(in.)	20(13/16)
	Dimensions	W	mm(in.)	990(39)
		D	mm(in.)	235(9-1/4)
		H	mm(in.)	340(13-3/8)
	Weight		kg(lbs)	16(35)

INDOOR UNIT	**Service Ref.**			**PKA-A18GA(1)(2) / PKA-A18GAL(1)(2)**
	Power supply(phase, cycle, voltage)			Single phase, 60Hz, 208/230V
		Max. Fuse Size	A	15
		Min. Circuit Ampacity	A	1
	External finish			Munsell 0.70Y 8.59/0.97
	Heat exchanger			Plate fin coil
	Fan	Fan(drive) × No.		Line flow (direct) × 1
		Fan motor output	kW	0.030
		Fan motor	F.L.A	0.33
		Airflow(Low-Medium2-Medium1-High)	m³/min(CFM)	Dry: 9-10-11-12(320-350-390-425)
				Wet:8-9-10-11(290-315-350-380)
		External static pressure	Pa(mmAq)	0(direct blow)
	Operation control & Thermostat			GA: Wired remote controller & built-in GAL:Wireless remote controller & built-in
	Noise level(Low-High)		dB	36-38-41-43
	Field drain pipe I.D.		mm(in.)	20(13/16)
	Dimensions	W	mm(in.)	990(39)
		D	mm(in.)	235(9-1/4)
		H	mm(in.)	340(13-3/8)
	Weight		kg(lbs)	16(35)

INDOOR UNIT	**Service Ref.**			**PKA-A24FA(1)(2) / PKA-A24FAL(1)(2)**
	Power supply (phase, cycle, voltage)			Single phase, 60Hz, 208/230V
		Max. Fuse Size	A	15
		Min. Circuit Ampacity	A	1
	External finish			Munsell 3.4Y 7.7/0.8
	Heat exchanger			Plate fin coil
	Fan	Fan (drive) × No.		Line flow (direct) × 2
		Fan motor output	kW	0.045
		Fan motor	F.L.A	0.43
		Airflow (Low-High)	m³/min(CFM)	Dry: 15-20(530-705)
				Wet:14-18(480-635)
		External static pressure	Pa(mmAq)	0(direct blow)
	Operation control & Thermostat			FA:Wired remote controller & built-in FAL: Wireless remote controller & built-in
	Noise level(Low-High)		dB	39-45
	Field drain pipe I.D.		mm(in.)	20(13/16)
	Dimensions	W	mm(in.)	1,400(55-1/8)
		D	mm(in.)	235(9-1/4)
		H	mm(in.)	340(13-3/8)
	Weight		kg(lbs)	24(53)

INDOOR UNIT	**Service Ref.**			**PKA-A30FA(1)(2) / PKA-A30FAL(1)(2)**
	Power supply (phase, cycle, voltage)			Single phase, 60Hz, 208/230V
		Max. Fuse Size	A	15
		Min. Circuit Ampacity	A	1
	External finish			Munsell 3.4Y 7.7/0.8
	Heat exchanger			Plate fin coil
	Fan	Fan (drive) × No.		Line flow (direct) × 2
		Fan motor output	kW	0.045
		Fan motor	F.L.A	0.43
		Airflow (Low-High)	m³/min(CFM)	Dry: 15-20(530-705)
				Wet: 14-18(480-635)
		External static pressure	Pa(mmAq)	0(direct blow)
	Operation control & Thermostat			FA: Wired remote controller & built-in FAL: Wireless remote controller & built-in
	Noise level (Low-High)		dB	39-45
	Field drain pipe I.D.		mm(in.)	20(13/16)
	Dimensions	W	mm(in.)	1,400(55-1/8)
		D	mm(in.)	235(9-1/4)
		H	mm(in.)	340(13-3/8)
	Weight		kg(lbs)	24(53)

INDOOR UNIT	**Service Ref.**			**PKA-A36FA(1)(2) / PKA-A36FAL(1)(2)**
	Power supply (phase, cycle, voltage)			Single phase, 60Hz, 208/230V
		Max. Fuse Size	A	15
		Min. Circuit Ampacity	A	1
	External finish			Munsell 3.4Y 7.7/0.8
	Heat exchanger			Plate fin coil
	Fan	Fan(drive) × No.		Line flow (direct) × 2
		Fan motor output	kW	0.070
		Fan motor	F.L.A	0.52
		Airflow (Low-High)	m³/min(CFM)	Dry: 22-28(780-990)
				Wet:20-25(700-890)
		External static pressure	Pa(mmAq)	0(direct blow)
	Operation control & Thermostat			FA: Wired remote controller & built-in FAL: Wireless remote controller & built-in
	Noise level (Low-High)		dB	46-49
	Field drain pipe I.D.		mm(in.)	20(13/16)
	Dimensions	W	mm(in.)	1,680(66-1/8)
		D	mm(in.)	235(9-1/4)
		H	mm(in.)	340(13-3/8)
	Weight		kg(lbs)	28(62)

6 NOISE CRITERION CURVES

PKA-A12GA PKA-A12GA$_2$
PKA-A12GAL PKA-A12GAL$_2$
PKA-A18GA PKA-A18GA$_2$
PKA-A18GAL PKA-A18GAL$_2$
PKA-A12GA$_1$
PKA-A12GAL$_1$
PKA-A18GA$_1$
PKA-A18GAL$_1$

NOTCH	SPL(dB)	LINE
High	43	○—○
Medium1	41	△—△
Medium2	38	●—●
Low	36	▲—▲

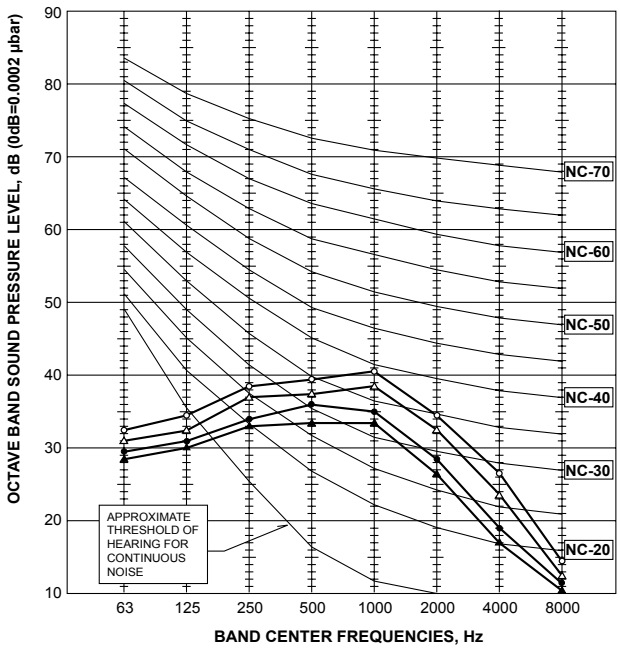

PKA-A24FA PKA-A24FA$_2$
PKA-A30FA PKA-A30FA$_2$
PKA-A24FAL PKA-A24FAL$_2$
PKA-A30FAL PKA-A30FAL$_2$
PKA-A24FA$_1$
PKA-A30FA$_1$
PKA-A24FAL$_1$
PKA-A30FAL$_1$

NOTCH	SPL(dB)	LINE
High	45	○—○
Low	39	●—●

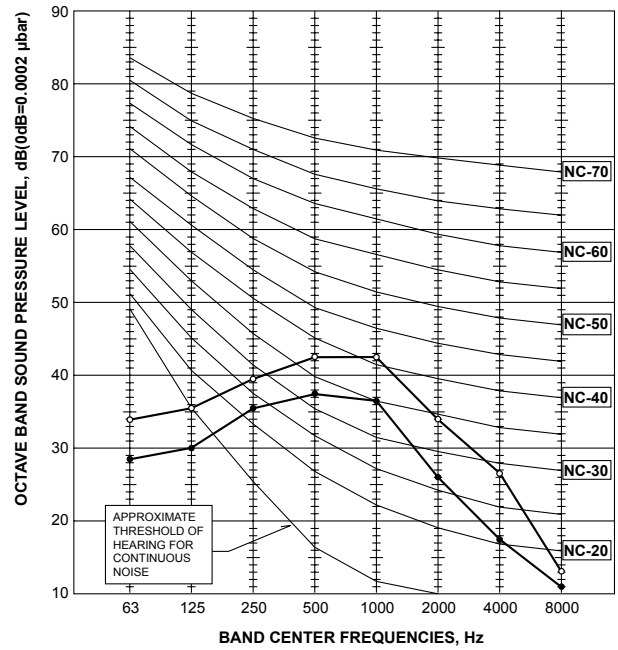

PKA-A36FA PKA-A36FA$_2$
PKA-A36FAL PKA-A36FAL$_2$
PKA-A36FA$_1$
PKA-A36FAL$_1$

NOTCH	SPL(dB)	LINE
High	49	○—○
Low	46	●—●

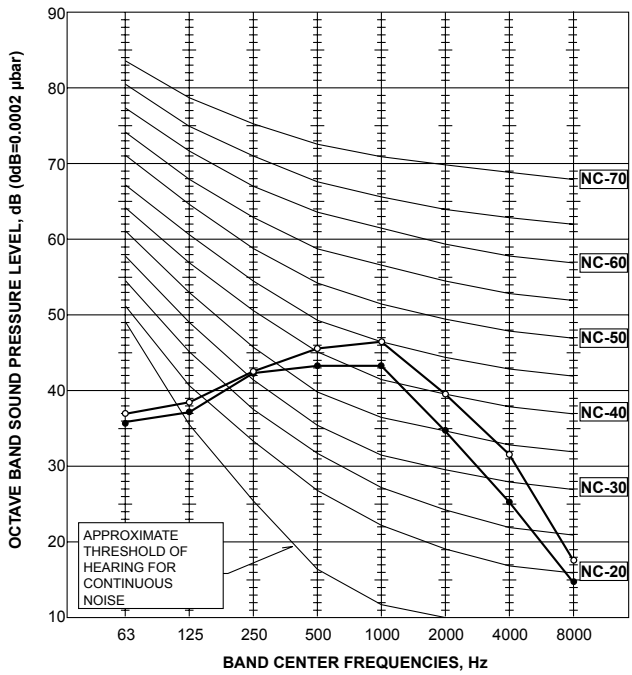

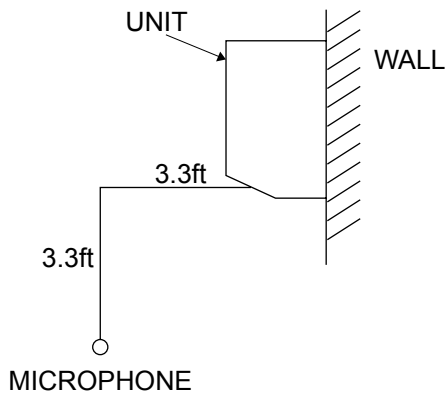

7 OUTLINES AND DIMENSIONS

INDOOR UNIT

PKA-A12GA **PKA-A18GA** **PKA-A12GAL** **PKA-A18GAL**
PKA-A12GA1 **PKA-A18GA1** **PKA-A12GAL1** **PKA-A18GAL1**
PKA-A12GA2 **PKA-A18GA2** **PKA-A12GAL2** **PKA-A18GAL2**

Unit :inch(mm)

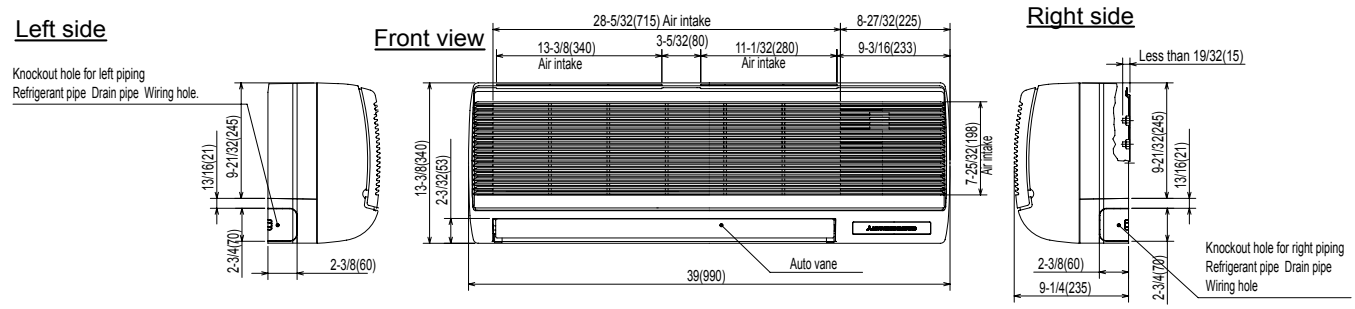

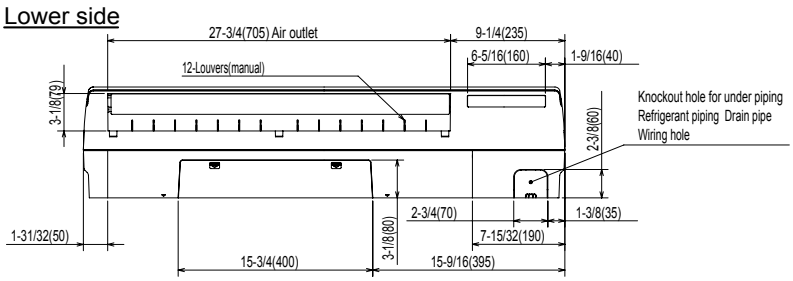

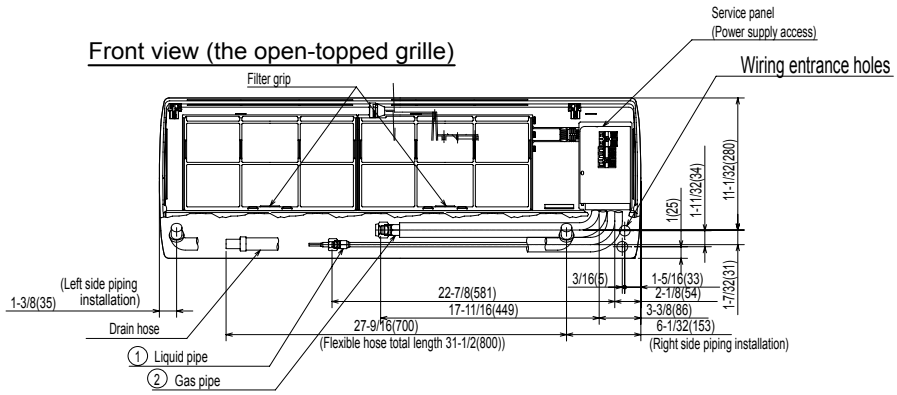

Service space required around indoor unit

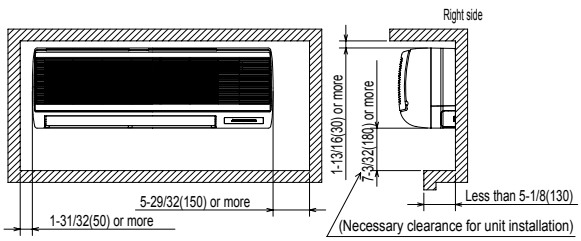

Details of installation plate

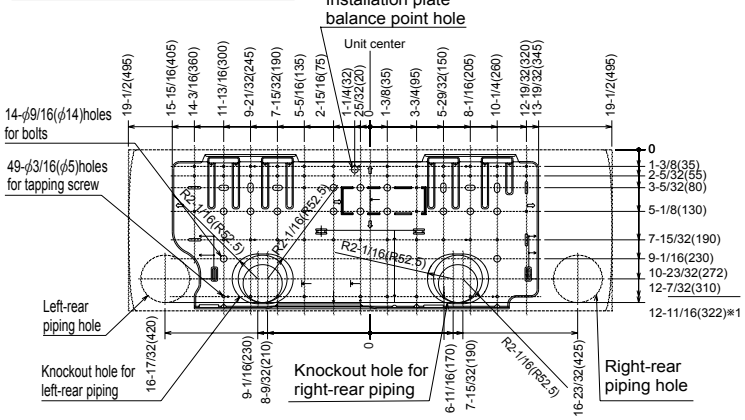

MODEL	12/18
①Liquid pipe	1/4 inch
②Gas pipe	1/2 inch

Sleeve *1	Through-hole
ø2-15/16(ø75)	ø2-15/16~ø3-5/32 (ø75~ø80)

*1 Sleeves are available on the market.
*2 This size shows the lower end of through hole.

INDOOR UNIT

PKA-A24FA PKA-A30FA PKA-A24FAL PKA-A30FAL
PKA-A24FA1 PKA-A30FA1 PKA-A24FAL1 PKA-A30FAL1
PKA-A24FA2 PKA-A30FA2 PKA-A24FAL2 PKA-A30FAL2

Unit :inch(mm)

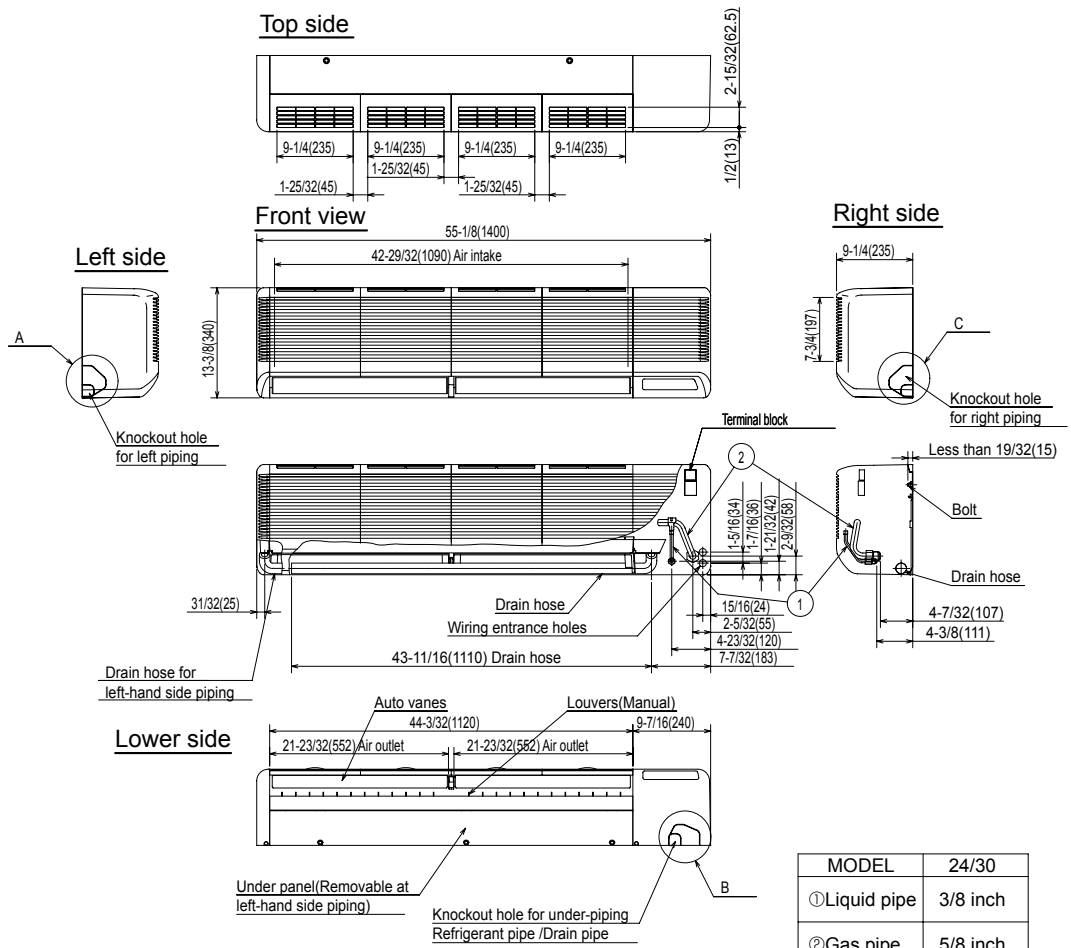

MODEL	24/30
①Liquid pipe	3/8 inch
②Gas pipe	5/8 inch

Sleeve*1	Through hole
ø3-17/32 (ø90)	ø3-17/32~ø3-15/16 (ø90~ø100)

*1 Sleeves are available on the market.

Service space required around indoor unit

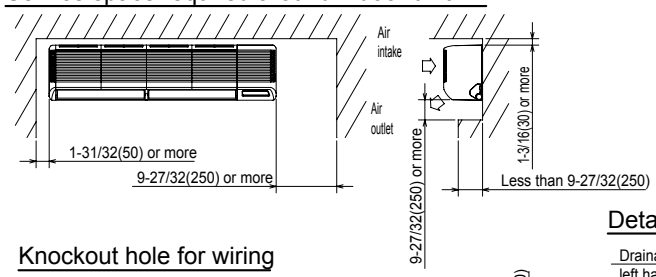

Knockout hole for wiring

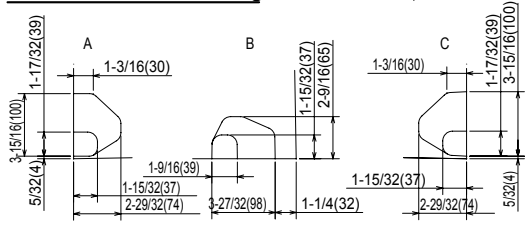

Details of installation plate

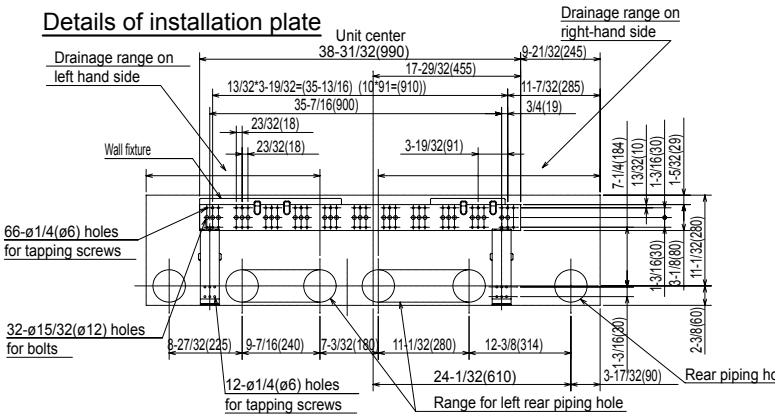

INDOOR UNIT

PKA-A36FA PKA-A36FAL PKA-A36FA1 PKA-A36FAL1 PKA-A36FA2 PKA-A36FAL2

Unit :inch(mm)

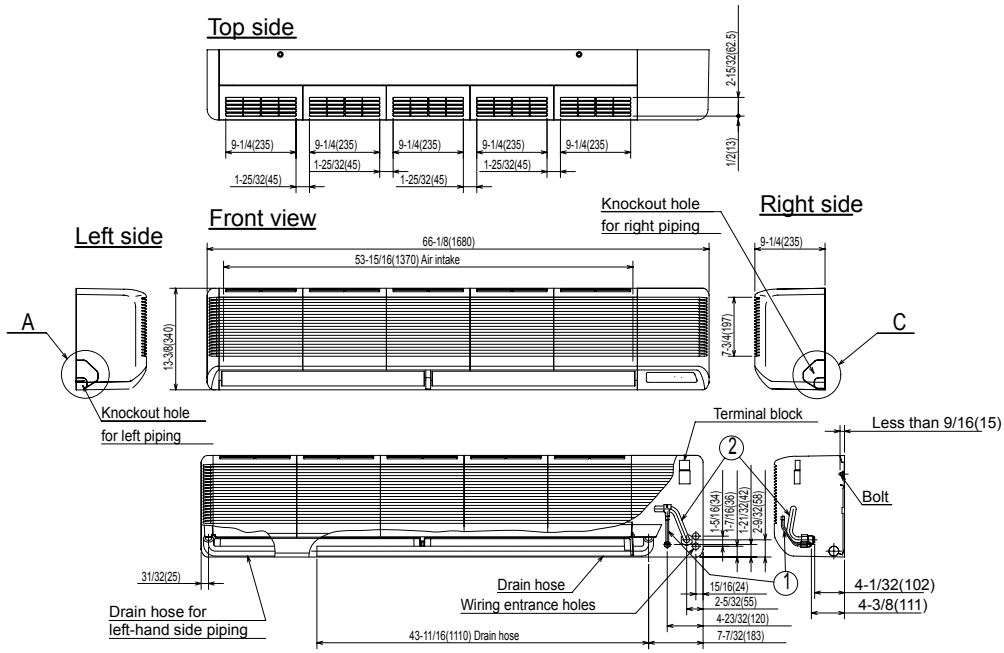

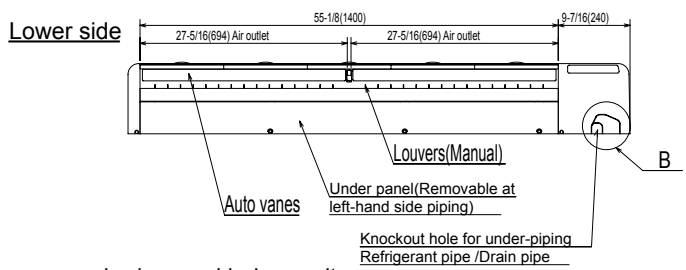

MODEL	36
①Liquid pipe	3/8 inch
②Gas pipe	5/8 inch

Sleeve*1	Through hole
ø3-17/32 (ø90)	ø3-17/32~ø3-15/16 (ø90~ø100)

*1 Sleeves are available on the market.

Service space required around indoor unit

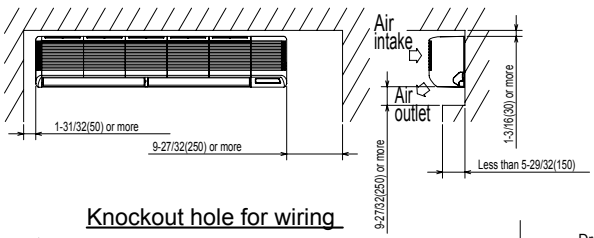

Knockout hole for wiring

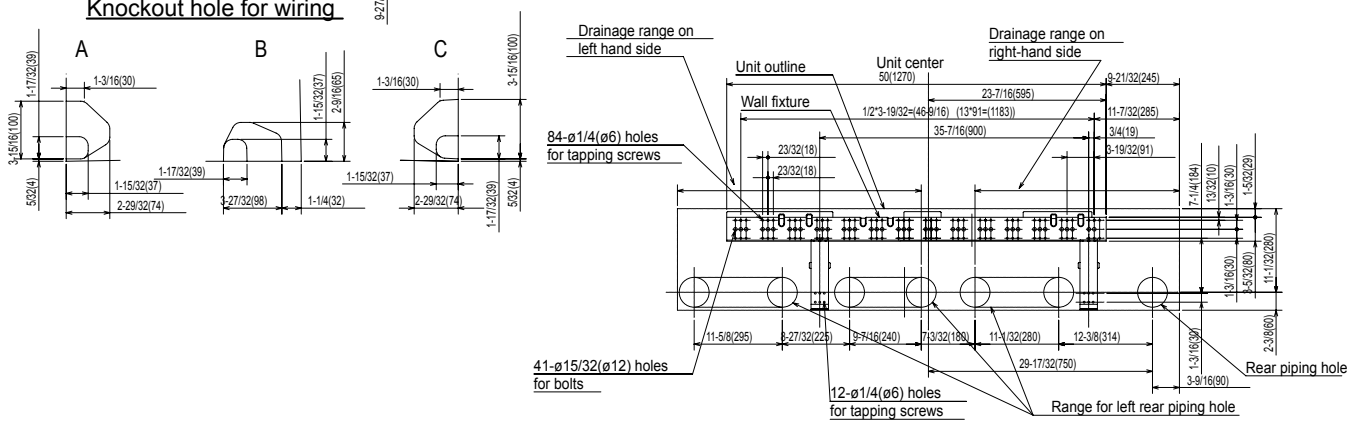

8 WIRING DIAGRAM

PKA-A12GA PKA-A18GA PKA-A12GAL PKA-A18GAL
PKA-A12GA1 PKA-A18GA1 PKA-A12GAL1 PKA-A18GAL1

[LEGEND]

SYMBOL	NAME
P.B	INDOOR POWER BOARD
I.B	INDOOR CONTROLLER BOARD
FUSE	FUSE (6.3A/250V)
ZNR	VARISTOR
CN2L	CONNECTOR<LOSSNAY>
CN32	CONNECTOR<REMOTE SWITCH>
CN41	CONNECTOR<HA TERMINAL-A>
CN51	CONNECTOR<CENTRALLY CONTROL>
SW1	SWITCH <MODEL SELECTION>※See Table 1.
SW2	SWITCH <CAPACITY CODE>※See Table 2.
SWE	SWITCH<EMERGENCY OPERATION>
X4	RELAY<FAN MOTOR>
BCR	FAN CONTROL ELEMENT
LED1	POWER SUPPLY<I.B>
LED2	POWER SUPPLY<R.B>
LED3	TRANSMISSION<INDOOR-OUTDOOR>

SYMBOL	NAME
C	CAPACITOR<FAN MOTOR>
MF	FAN MOTOR
MV	VANE MOTOR
TB4	TERMINAL BLOCK<INDOOR/OUTDOOR CONNECTING LINE>
TB5,TB6	TERMINAL BLOCK<REMOTE CONTROLLER TRANSMISSION LINE >
TH1	ROOM TEMP.THERMISTOR <32°F/15kΩ, 77°F/5.2kΩ DETECT>
TH2	PIPE TEMP.THERMISTOR/LIQUID <32°F/15kΩ, 77°F/5.2kΩ DETECT>
TH5	COND./EVA.TEMP.THERMISTOR <32°F/15kΩ, 77°F/5.2kΩ DETECT>
R.B	WIRED REMOTE CONTROLLER BOARD

SYMBOL	NAME
W.B	WIRELESS REMOTE CONTROLLER BOARD
RU	RECEIVING UNIT
BZ	BUZZER
LED1	LED<RUN INDICATOR >
LED2	LED<HOT ADJUST>
SW1	SWITCH<HEATING ON/OFF>
SW2	SWITCH<COOLING ON/OFF>

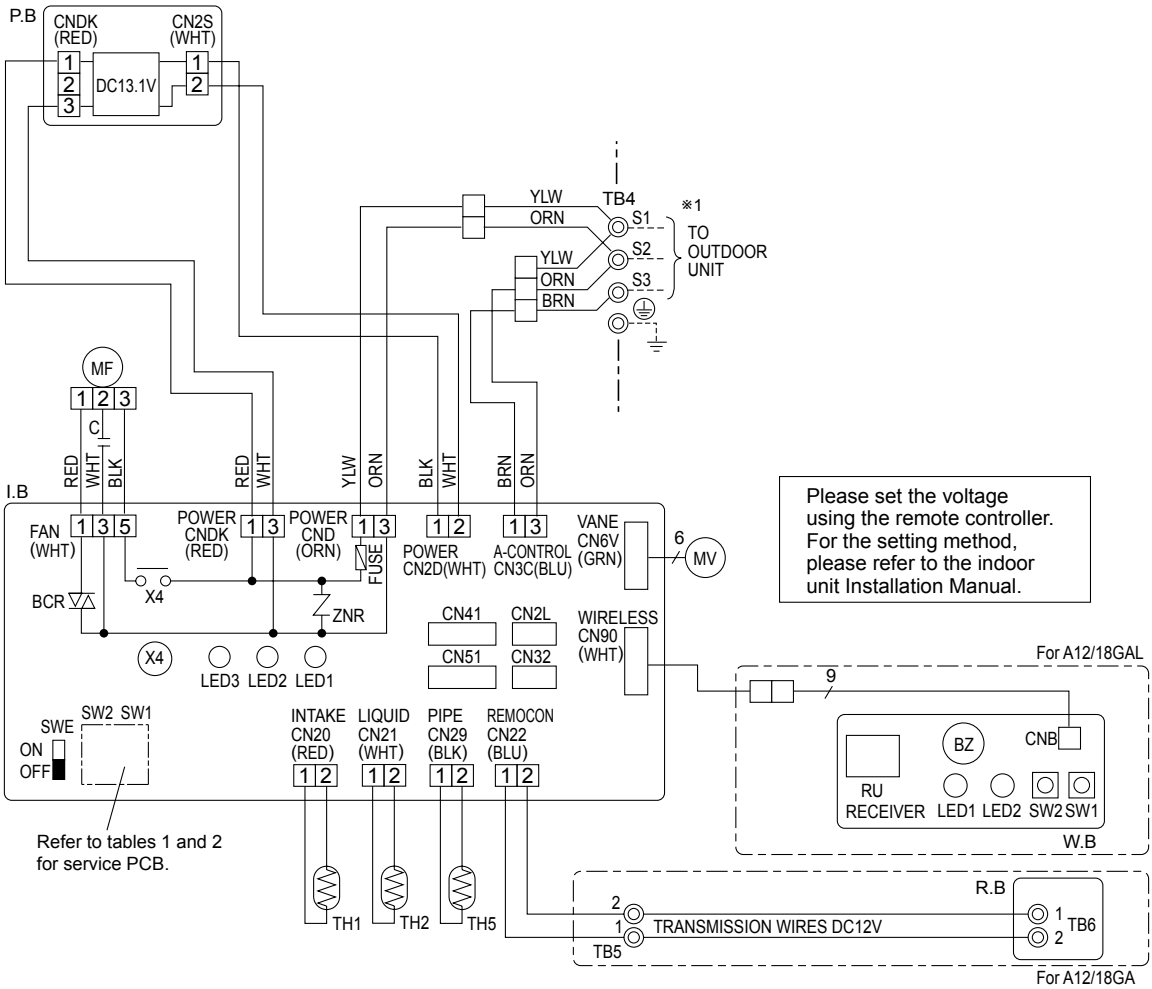

Table 1

SW1
Service board
1 2 3 4 5 ON OFF

Table 2

SW2			
MODELS	Service board	MODELS	Service board
PKA-A12GA(L)	1 2 3 4 5 ON OFF	PKA-A18GA(L)	1 2 3 4 5 ON OFF

NOTES:
1. Since the outdoor side electric wiring may change, be sure to check the outdoor unit electric wiring for servicing.
2. Indoor and outdoor connecting wires have polarities, make sure to match terminal numbers (S1, S2, S3) for correct wiring.
3. Symbols used in wiring diagram above are, ▭▭▭ : Connector, ◎ : Terminal (block).
4. This diagram shows the wiring of Indoor and Outdoor connecting wires (specification of 230V), adopting superimposed system of power and signal.
   ※1. Use copper supply wires.

PKA-A12GA2 PKA-A18GA2 PKA-A12GAL2 PKA-A18GAL2

[LEGEND]

SYMBOL	NAME	SYMBOL	NAME	SYMBOL	NAME
P.B	INDOOR POWER BOARD	LED2	POWER SUPPLY<R.B>	W.B	WIRELESS REMOTE CONTROLLER BOARD
I.B	INDOOR CONTROLLER BOARD	LED3	TRANSMISSION<INDOOR-OUTDOOR>	RU	RECEIVING UNIT
FUSE	FUSE (6.3A/250V)	C	CAPACITOR<FAN MOTOR>	BZ	BUZZER
ZNR	VARISTOR	MF	FAN MOTOR	LED1	LED<RUN INDICATOR >
CN2L	CONNECTOR<LOSSNAY>	MV	VANE MOTOR	LED2	LED<HOT ADJUST>
CN24	CONNECTOR<BACK-UP HEATING>	TB4	TERMINAL BLOCK<INDOOR/OUTDOOR CONNECTING LINE>	SW1	SWITCH<HEATING ON/OFF>
CN30	CONNECTOR<LLC>			SW2	SWITCH<COOLING ON/OFF>
CN32	CONNECTOR<REMOTE SWITCH>	TB5,TB6	TERMINAL BLOCK<REMOTE CONTROLLER TRANSMISSION LINE >		
CN41	CONNECTOR<HA TERMINAL-A>				
CN51	CONNECTOR<CENTRALLY CONTROL>	TH1	ROOM TEMP.THERMISTOR <32°F/15kΩ, 77°F/5.2kΩ DETECT>		
SW1	SWITCH <MODEL SELECTION>※See Table 1.				
SW2	SWITCH <CAPACITY CODE>※See Table 2.	TH2	PIPE TEMP.THERMISTOR/LIQUID <32°F/15kΩ, 77°F/5.2kΩ DETECT>		
SWE	SWITCH<EMERGENCY OPERATION>				
X4	RELAY<FAN MOTOR>	TH5	COND./EVA.TEMP.THERMISTOR <32°F/15kΩ, 77°F/5.2kΩ DETECT>		
BCR	FAN CONTROL ELEMENT				
LED1	POWER SUPPLY<I.B>	R.B	WIRED REMOTE CONTROLLER BOARD		

Table 1

SW1
Service board
1 2 3 4 5 ON OFF

Table 2

SW2			
MODELS	Service board	MODELS	Service board
PKA-A12GA(L)	1 2 3 4 5 ON OFF	PKA-A18GA(L)	1 2 3 4 5 ON OFF

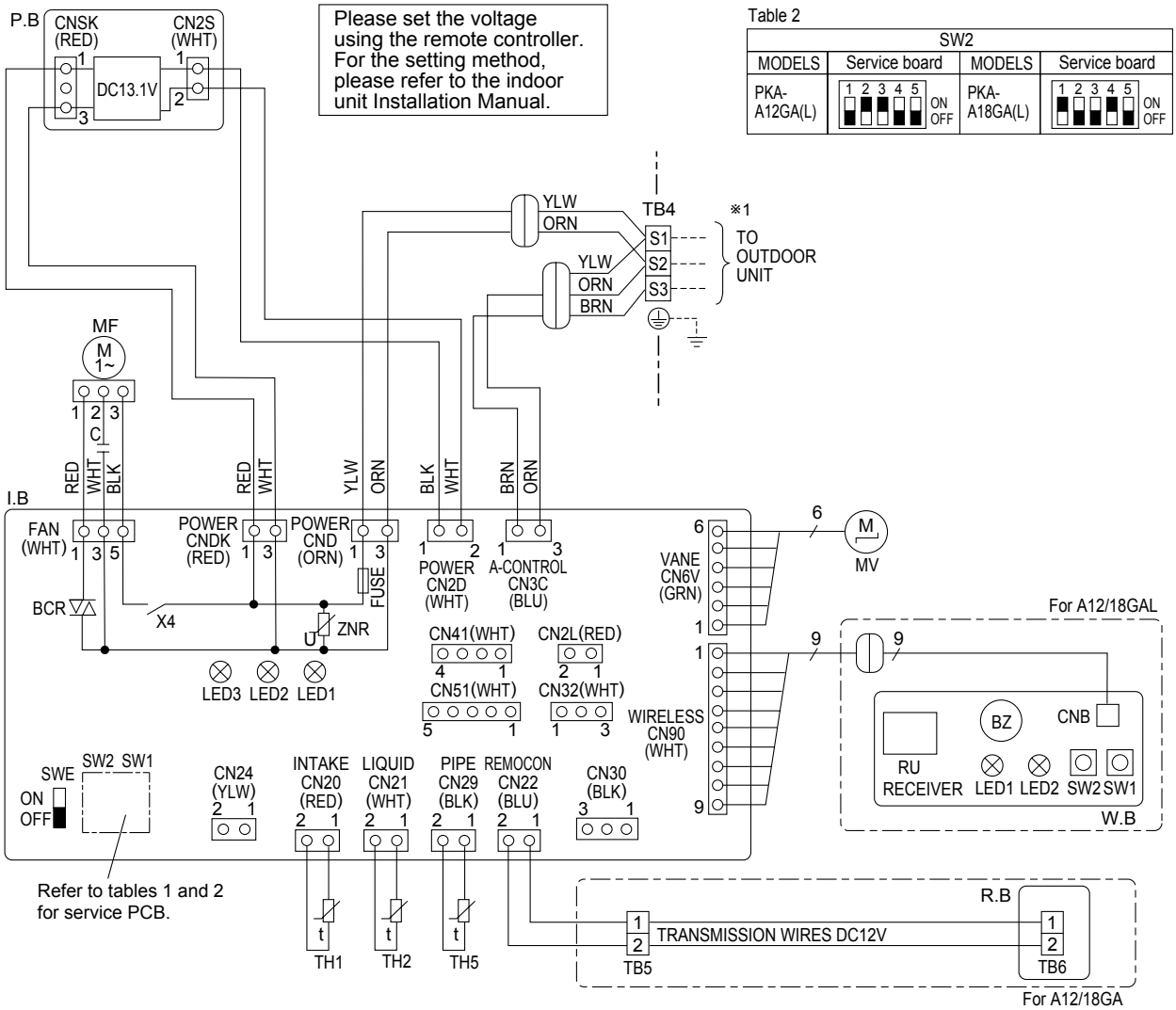

NOTES:

1. Since the outdoor side electric wiring may change be sure to check the outdoor unit electric wiring for servicing.
2. Indoor and outdoor connecting wires are made with polarities, make wiring matching terminal numbers (S1, S2, S3).
3. Symbols used in wiring diagram above are, ▭▭▭: Connector, ▭▭▭: Terminal (block).
4. This diagram shows the wiring of Indoor and Outdoor connecting wires (specification of 230V), adopting superimposed system of power and signal.

※1. Use copper supply wires.

[Self-diagnosis]

Please refer to technical manuals etc.

PKA-A24FA PKA-A30FA PKA-A36FA PKA-A24FAL PKA-A30FAL PKA-A36FAL
PKA-A24FA1 PKA-A30FA1 PKA-A36FA1 PKA-A24FAL1 PKA-A30FAL1 PKA-A36FAL1

[LEGEND]

SYMBOL	NAME
P.B	INDOOR POWER BOARD
I.B	INDOOR CONTROLLER BOARD
FUSE	FUSE (6.3A/250V)
ZNR	VARISTOR
CN2L	CONNECTOR<LOSSNAY>
CN32	CONNECTOR<REMOTE SWITCH>
CN41	CONNECTOR<HA TERMINAL-A>
CN51	CONNECTOR<CENTRALLY CONTROL>
SW1	SWITCH <MODEL SELECTION>※See Table 1.
SW2	SWITCH <CAPACITY CODE>※See Table 2.
SWE	SWITCH<EMERGENCY OPERATION>
X4	RELAY<FAN MOTOR>
BCR	FAN CONTROL ELEMENT
LED1	POWER SUPPLY<I.B>
LED2	POWER SUPPLY<R.B>
LED3	TRANSMISSION<INDOOR-OUTDOOR>

SYMBOL	NAME
C	CAPACITOR<FAN MOTOR>
MF	FAN MOTOR
MV	VANE MOTOR
TB4	TERMINAL BLOCK<INDOOR/OUTDOOR CONNECTING LINE>
TB5,TB6	TERMINAL BLOCK<REMOTE CONTROLLER TRANSMISSION LINE>
TH1	ROOM TEMP.THERMISTOR <32°F/15kΩ, 77°F/5.2kΩ DETECT>
TH2	PIPE TEMP.THERMISTOR/LIQUID <32°F/15kΩ, 77°F/5.2kΩ DETECT>
TH5	COND./EVA.TEMP.THERMISTOR <32°F/15kΩ, 77°F/5.2kΩ DETECT>
R.B	WIRED REMOTE CONTROLLER BOARD

SYMBOL		NAME
W.B		WIRELESS REMOTE CONTROLLER BOARD
	RU	RECEIVING UNIT
	BZ	BUZZER
	LED1	LED<RUN INDICATOR>
	LED2	LED<HOT ADJUST>
	SW1	SWITCH<HEATING ON/OFF>
	SW2	SWITCH<COOLING ON/OFF>

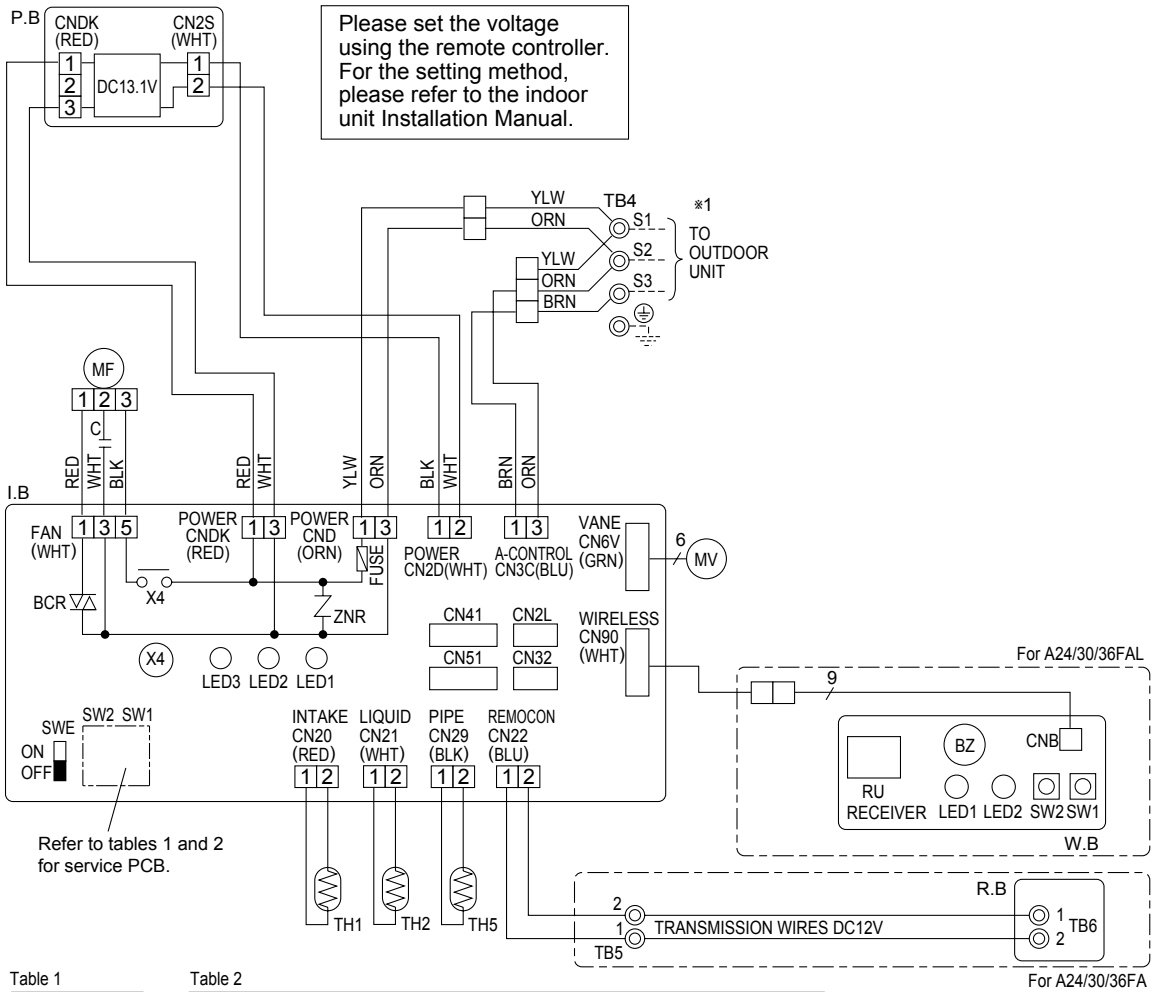

Table 1

SW1
Service board
1 2 3 4 5 ON OFF

Table 2

SW2					
MODELS	Service board	MODELS	Service board	MODELS	Service board
PKA-A24FA(L)	1 2 3 4 5 ON OFF	PKA-A30FA(L)	1 2 3 4 5 ON OFF	PKA-A36FA(L)	1 2 3 4 5 ON OFF

NOTES:
1. Since the outdoor side electric wiring may change be sure to check the outdoor unit electric wiring for servicing.
2. Indoor and outdoor connecting wires have polarities, make sure to match terminal numbers (S1, S2, S3) for correct wiring.
3. Symbols used in wiring diagram above are, ☐☐☐: Connector, ◎: Terminal (block).
4. This diagram shows the wiring of Indoor and Outdoor connecting wires (specification of 230V), adopting superimposed system of power and signal.
   ※1. Use copper supply wires.

PKA-A24FA2 PKA-A30FA2 PKA-A36FA2 PKA-A24FAL2 PKA-A30FAL2 PKA-A36FAL2

[LEGEND]

SYMBOL	NAME	SYMBOL	NAME	SYMBOL	NAME
P.B	INDOOR POWER BOARD	LED2	POWER SUPPLY<R.B>	W.B	WIRELESS REMOTE CONTROLLER BOARD
I.B	INDOOR CONTROLLER BOARD	LED3	TRANSMISSION<INDOOR-OUTDOOR>	RU	RECEIVING UNIT
FUSE	FUSE (6.3A/250V)	C	CAPACITOR<FAN MOTOR>	BZ	BUZZER
ZNR	VARISTOR	MF	FAN MOTOR	LED1	LED<RUN INDICATOR >
CN2L	CONNECTOR<LOSSNAY>	MV	VANE MOTOR	LED2	LED<HOT ADJUST>
CN24	CONNECTOR<BACK-UP HEATING>	TB4	TERMINAL BLOCK<INDOOR/OUTDOOR CONNECTING LINE>	SW1	SWITCH<HEATING ON/OFF>
CN30	CONNECTOR<LLC>			SW2	SWITCH<COOLING ON/OFF>
CN32	CONNECTOR<REMOTE SWITCH>	TB5,TB6	TERMINAL BLOCK<REMOTE CONTROLLER TRANSMISSION LINE >		
CN41	CONNECTOR<HA TERMINAL-A>				
CN51	CONNECTOR<CENTRALLY CONTROL>	TH1	ROOM TEMP.THERMISTOR <32°F/15kΩ, 77°F/5.2kΩ DETECT>		
SW1	SWITCH <MODEL SELECTION>※See Table 1.				
SW2	SWITCH <CAPACITY CODE>※See Table 2.	TH2	PIPE TEMP.THERMISTOR/LIQUID <32°F/15kΩ, 77°F/5.2kΩ DETECT>		
SWE	SWITCH<EMERGENCY OPERATION>				
X4	RELAY<FAN MOTOR>	TH5	COND./EVA.TEMP.THERMISTOR <32°F/15kΩ, 77°F/5.2kΩ DETECT>		
BCR	FAN CONTROL ELEMENT				
LED1	POWER SUPPLY<I.B>	R.B	WIRED REMOTE CONTROLLER BOARD		

Table 1

SW1
Service board
1 2 3 4 5 ON OFF

Table 2

SW2	
MODELS	Service board
PKA-A24FA(L)	1 2 3 4 5 ON OFF
MODELS	Service board
PKA-A30FA(L)	1 2 3 4 5 ON OFF
MODELS	Service board
PKA-A36FA(L)	1 2 3 4 5 ON OFF

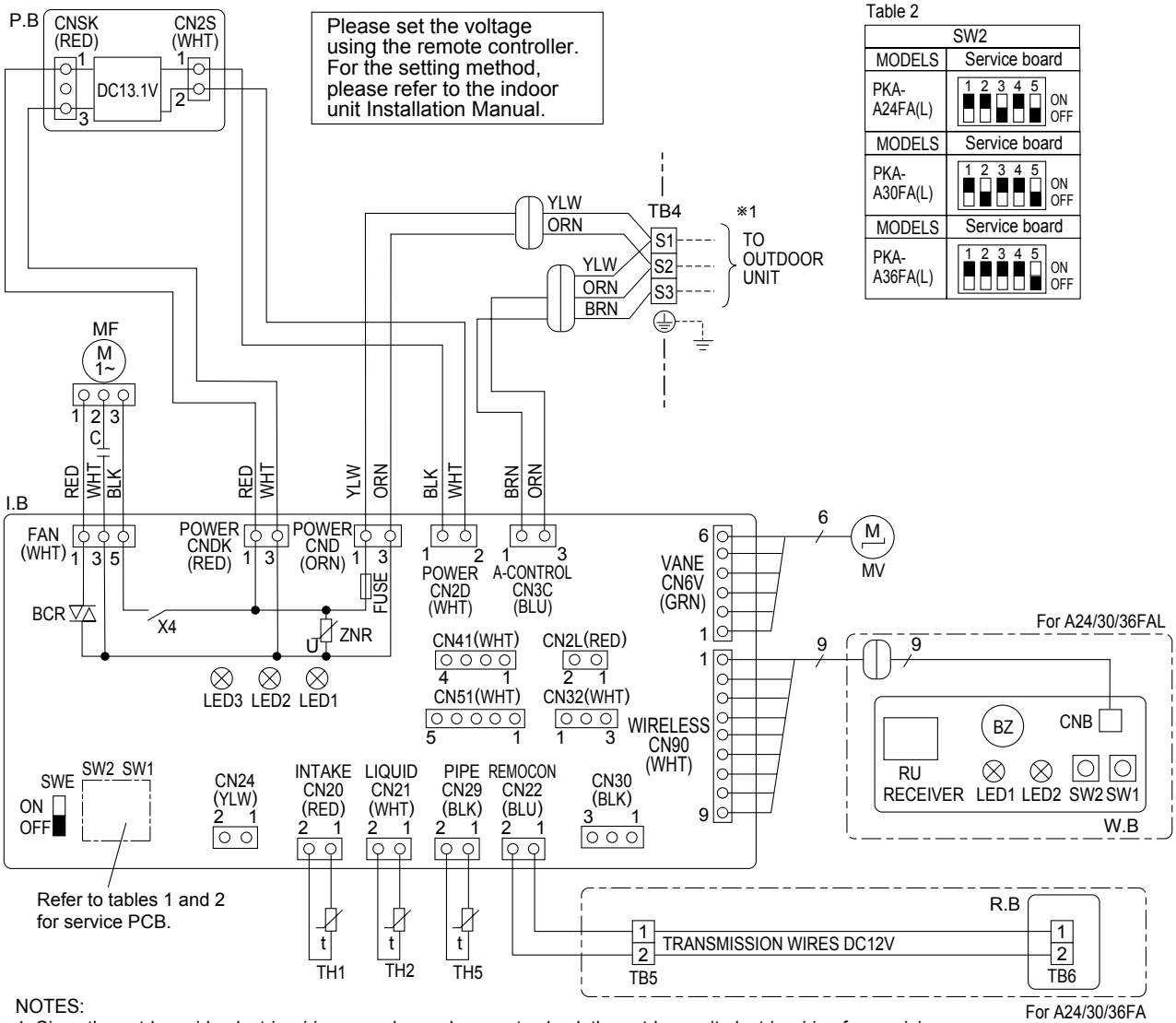

NOTES:
1. Since the outdoor side electric wiring may change be sure to check the outdoor unit electric wiring for servicing.
2. Indoor and outdoor connecting wires are made with polarities, make wiring matching terminal numbers (S1, S2, S3).
3. Symbols used in wiring diagram above are, ▭▭▭: Connector, ▭▭▭: Terminal (block).
4. This diagram shows the wiring of Indoor and Outdoor connecting wires (specification of 230V), adopting superimposed system of power and signal.

※1. Use copper supply wires.

[Self-diagnosis]
Please refer to technical manuals etc.

9 REFRIGERANT SYSTEM DIAGRAM

PKA-A12GA	**PKA-A18GA**	**PKA-A24FA**	**PKA-A30FA**	**PKA-A36FA**
PKA-A12GAL	**PKA-A18GAL**	**PKA-A24FAL**	**PKA-A30FAL**	**PKA-A36FAL**
PKA-A12GA$_1$	**PKA-A18GA$_1$**	**PKA-A24FA$_1$**	**PKA-A30FA$_1$**	**PKA-A36FA$_1$**
PKA-A12GAL$_1$	**PKA-A18GAL$_1$**	**PKA-A24FAL$_1$**	**PKA-A30FAL$_1$**	**PKA-A36FAL$_1$**
PKA-A12GA$_2$	**PKA-A18GA$_2$**	**PKA-A24FA$_2$**	**PKA-A30FA$_2$**	**PKA-A36FA$_2$**
PKA-A12GAL$_2$	**PKA-A18GAL$_2$**	**PKA-A24FAL$_2$**	**PKA-A30FAL$_2$**	**PKA-A36FAL$_2$**

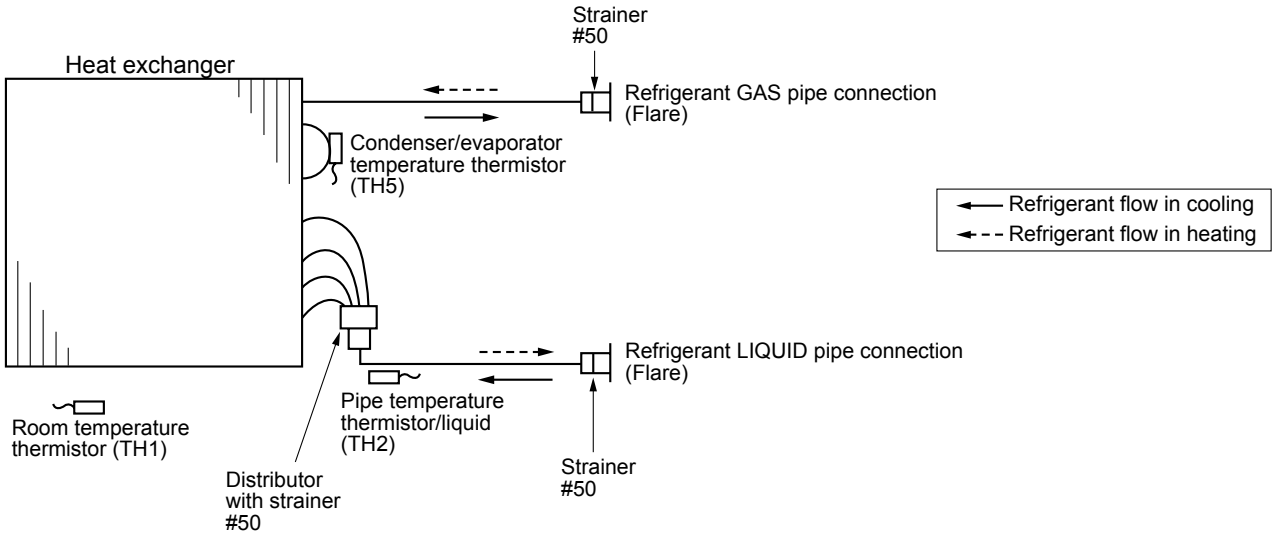

10 TROUBLESHOOTING

10-1. TROUBLESHOOTING

<Error code display by self-diagnosis and actions to be taken for service (summary)>

Present and past error codes are logged and displayed on the wired remote controller or controller board of outdoor unit. Actions to be taken for service and the trouble reoccurrence at field are summarized in the table below. Check the contents below before investigating details.

Unit conditions at service	Error code	Actions to be taken for service (summary)
The trouble is reoccurring.	Displayed	Judge what is wrong and take a corrective action according to “SELF-DIAGNOSIS ACTION TABLE” (10-3).
	Not displayed	Identify the cause of the trouble and take a corrective action according to “TROUBLESHOOTING BY INFERIOR PHENOMENA ” (10-4).
The trouble is not reoccurring.	Logged	①Consider the temporary defects such as the work of protection devices in the refrigerant circuit including compressor, poor connection of wiring, noise and etc. Re-check the symptom, and check the installation environment, refrigerant amount, weather when the trouble occurred, and wiring related. ②Reset error code logs and restart the unit after finishing service. ③There is no abnormality in electrical components, controller boards, and remote controller.
	Not logged	①Recheck the abnormal symptom. ②Identify the cause of the trouble and take a corrective action according to “TROUBLESHOOTING BY INFERIOR PHENOMENA ” (10-4). ③Continue to operate unit for the time being if the cause is not ascertained. ④There is no abnormality in electrical components, controller boards, remote controller etc.

10-2. MALFUNCTION-DIAGNOSIS METHOD BY REMOTE CONTROLLER

<In case of trouble during operation>

When a malfunction occurs to the air conditioner, both indoor unit and outdoor unit will stop and operation lamp blinks to inform unusual stop.

<Malfunction-diagnosis method at maintenance service>

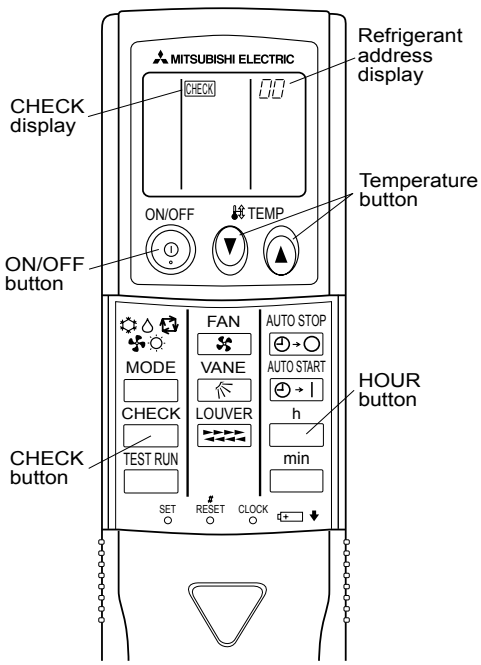

[Procedure]

1. Press the CHECK button twice.	• "CHECK" lights, and refrigerant address "00" blinks. • Check that the remote controller's display has stopped before continuing.
2. Press the temperature buttons.	• Select the refrigerant address of the indoor unit for the self-diagnosis. Note: Set refrigerant address using the outdoor unit's DIP switch (SW1). (For more information, see the outdoor unit installation manual.)
3. Point the remote controller at the sensor on the indoor unit and press the HOUR button.	• If an air conditioner error occurs, the indoor unit's sensor emits an intermittent buzzer sound, the operation lamp blinks, and the error code is output. (It takes 3 seconds at most for error code to appear.)
4. Point the remote controller at the sensor on the indoor unit and press the ON/OFF button.	• The check mode is cancelled.

To be continued to the next page.

• Refer to the following tables for details on the check codes.

[Output pattern A]

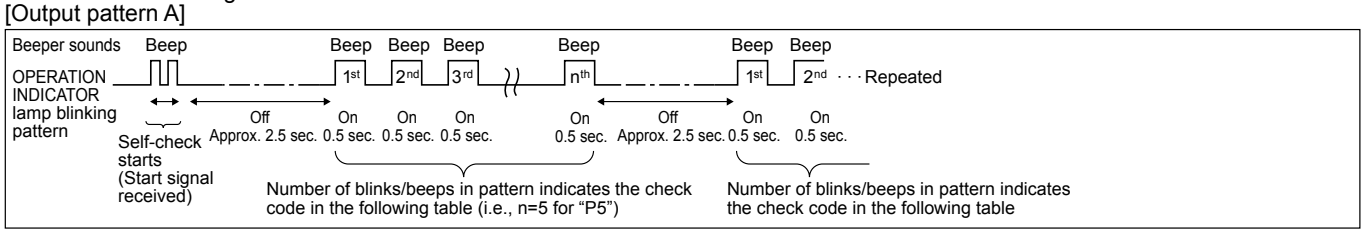

[Output pattern B] Only A-CONTROL

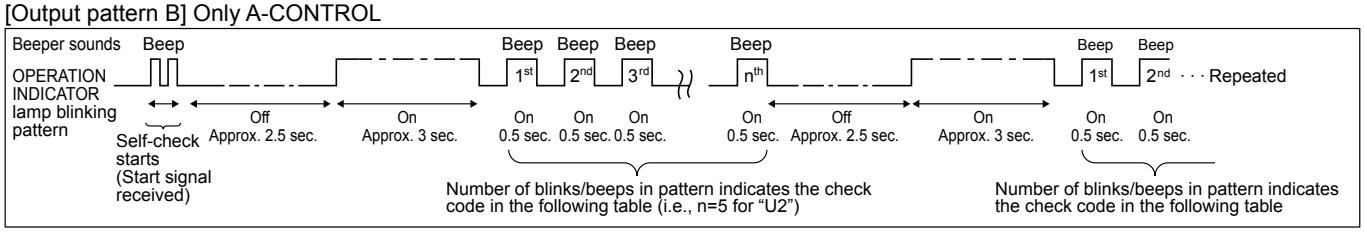

[Output pattern A] Errors detected by indoor unit

Wireless remote controller Beeper sounds/OPERATION INDICATOR lamp blinks (Number of times)	Wired remote controller ① Check code	Symptom	Remark
1	P1	Intake sensor error	———
2	P2	Pipe (TH2) sensor error	
	P9	Pipe (TH5) sensor error	
3	E6,E7	Indoor/outdoor unit communication error	
4	P4	Drain sensor error	
5	P5	Drain pump error	
	PA	Forced compressor stop(due to water leakage abnormality)	
6	P6	Freezing/Overheating protection operation	
7	EE	Communication error between indoor and outdoor units	
8	P8	Pipe temperature error	
9	E4, E5	Remote controller signal receiving error	
10	–	–	
11	–	–	
12	Fb	Indoor unit control system error (memory error, etc.)	
–	E0, E3	Remote controller transmission error	
–	E1, E2	Remote controller control board error	

[Output pattern B] Errors detected by unit other than indoor unit (outdoor unit, etc.)

Wireless remote controller Beeper sounds/OPERATION INDICATOR lamp blinks (Number of times)	Wired remote controller ① Check code	Symptom	Remark
1	E9	Indoor/outdoor unit communication error (Transmitting error) (Outdoor unit)	As for outdoor unit, refer to outdoor unit's service manual. For details, check the LED display of the outdoor controller board.
2	UP	Compressor overcurrent interruption	
3	U3,U4	Open/short of outdoor unit thermistors	
4	UF	Compressor overcurrent interruption (When compressor locked)	
5	U2	Abnormal high discharging temperature/49C worked/ insufficient refrigerant	
6	U1,Ud	Abnormal high pressure (63H worked)/Overheating protection operation	
7	U5	Abnormal temperature of heatsink	
8	U8	Outdoor unit fan protection stop	
9	U6	Compressor overcurrent interruption/Abnormal of power module	
10	U7	Abnormality of superheat due to low discharge temperature	
11	U9,UH	Abnormality such as overvoltage or voltage shortage and abnormal synchronous signal to main circuit/Current sensor error	
12	–	–	
13	–	–	
14	Others	Other errors (Refer to the technical manual for the outdoor unit.)	

*1 If the beeper does not sound again after the initial 2 beeps to confirm the self-check start signal was received and the OPERATION INDICATOR lamp does not come on, there are no error records.

*2 If the beeper sounds 3 times continuously "beep, beep, beep (0.4 + 0.4 + 0.4 sec.)" after the initial 2 beeps to confirm the self-check start signal was received, the specified refrigerant address is incorrect.

• On wireless remote controller
The continuous buzzer sounds from receiving section of indoor unit.
Blink of operation lamp
• On wired remote controller
① Check code displayed in the LCD.

• If the unit cannot be operated properly after the test run has been performed, refer to the following table to find out the cause.

Symptom			Cause
Wired remote controller		LED 1, 2 (PCB in outdoor unit)	
PLEASE WAIT	For about 2 minutes after power-on	After LED 1, 2 are lighted, LED 2 is turned off, then only LED 1 is lighted. (Correct operation)	•For about 2 minutes after power-on,operation of the remote controller is not possible due to system start-up. (Correct operation)
PLEASE WAIT → Error code	Subsequent to about 2 minutes after power-on	Only LED 1 is lighted. → LED 1, 2 blink.	•Connector for the outdoor unit's protection device is not connected. •Reverse or open phase wiring for the outdoor unit's power terminal block (L1, L2, GR)
Display messages do not appear even when operation switch is turned ON (operation lamp does not light up).		Only LED 1 is lighted. → LED 1 blinks twice, LED 2 blinks once.	•Incorrect wiring between indoor and outdoor units (incorrect polarity of S1, S2, S3) •Remote controller wire short

On the wireless remote controller with condition above, following phenomena take place.
• No signals from the remote controller can be received.
• Operation lamp is blinking.
• The buzzer makes a short ping sound.

Note:
Operation is not possible for about 30 seconds after cancellation of function selection. (Correct operation)

For description of each LED (LED1, 2, 3) provided on the indoor controller, refer to the following table.

LED1 (power for microcomputer)	Indicates whether control power is supplied. Make sure that this LED is always lit.
LED2 (power for remote controller)	Indicates whether power is supplied to the remote controller. This LED lights only in the case of the indoor unit which is connected to the outdoor unit refrigerant address "0".
LED3 (communication between indoor and outdoor units)	Indicates state of communication between the indoor and outdoor units. Make sure that this LED is always blinking.

10-3. SELF-DIAGNOSIS ACTION TABLE

Note: Refer to the manual of outdoor unit for the details of display such as F, U, and other E.

Error Code	Abnormal point and detection method	Cause	Countermeasure
P1	**Room temperature thermistor (TH1)** ① The unit is in 3-minute resume prevention mode if short/open of thermistor is detected. Abnormal if the unit does not reset normally after 3 minutes. (The unit returns to normal operation, if it has been reset normally.) ② Constantly detected during cooling, drying, and heating operation. Short: -90℃ (194˚F) or more Open: -40℃ (-40˚F) or less	① Defective thermistor characteristics ② Contact failure of connector (CN20) on the indoor controller board (Insert failure) ③ Breaking of wire or contact failure of thermistor wiring ④ Defective indoor controller board	①–③ Check resistance value of thermistor. 0℃ (32˚F)·····15.0kΩ 10℃ (50˚F)·····9.6kΩ 20℃ (68˚F)·····6.3kΩ 30℃ (86˚F)·····4.3kΩ 40℃ (104˚F)·····3.0kΩ If you put force on (draw or bend) the lead wire with measuring resistance value of thermistor breaking of wire or contact failure can be detected. ② Check contact failure of connector (CN20) on the indoor controller board. Refer to 10-7. Turn the power on again and check restart after inserting connector again. ④ Check room temperature display on remote controller. Replace indoor controller board if there is abnormal difference with actual room temperature. Turn the power off, and on again to operate after check.
P2	**Pipe temperature thermistor/Liquid (TH2)** ① The unit is in 3-minute resume prevention mode if short/open of thermistor is detected. Abnormal if the unit does not reset normally after 3 minutes. (The unit returns to normal operation, if it has been reset normally.) ② Constantly detected during cooling, drying, and heating (except defrosting) operation. Short: 90℃ (194˚F) or more Open: -40℃ (-40˚F) or less	① Defective thermistor characteristics ② Contact failure of connector (CN21) on the indoor controller board (Insert failure) ③ Breaking of wire or contact failure of thermistor wiring ④ Defective refrigerant circuit is causing thermistor temperature of 90℃ (194˚F) or more or -40℃ (-40˚F) or less. ⑤ Defective indoor controller board	①–③ Check resistance value of thermistor. For characteristics, refer to (P1) above. ② Check contact failure of connector (CN21) on the indoor controller board. Refer to 10-7. Turn the power on and check restart after inserting connector again. ④ Check pipe <liquid> temperature with remote controller in test run mode. If pipe <liquid> temperature is extremely low (in cooling mode) or high (in heating mode), refrigerant circuit may have defect. ⑤ Check pipe <liquid> temperature with remote controller in test run mode. If there is extreme difference with actual pipe <liquid> temperature, replace indoor controller board. Turn the power off, and on again to operate after check.
P4	**Drain sensor (DS)** ① Suspensive abnormality, if short/open of thermistor is detected for 30 seconds continuously. Turn off compressor and indoor fan. ② Short/open is detected for 30 seconds continuously during suspensive abnormality. (The unit returns to normal operation, if it has been reset normally.) ③ Detect the following condition. • During cooling and drying operation • In case that pipe <liquid> temperature - room temperature <-10deg (Except defrosting) • When pipe <liquid> temperature or room temperature is short/open temperature. • During drain pump operation	① Defective thermistor characteristics ② Contact failure of connector (CN31) on the indoor controller board (Insert failure) ③ Breaking of wire or contact failure of drain sensor wiring ④ Defective indoor controller board	①–③ Check resistance value of thermistor. 0℃ (32˚F)·····6.0kΩ 10℃ (50˚F)·····3.9kΩ 20℃ (68˚F)·····2.6kΩ 30℃ (86˚F)·····1.8kΩ 40℃ (104˚F)·····1.3kΩ ② Check contact failure of connector (CN31) on the indoor controller board. Refer to 10-7. Turn the power on again and check restart after inserting connector again. ④ Replace indoor controller board if drain pump operates with the line of drain sensor connector CN31-① and ② is short-circuited, and abnormality reappears. Turn the power off, and on again to operate after check.
P5	**Malfunction of drain pump (DP)** ① Suspensive abnormality, if thermistor of drain sensor heats itself and temperature rises slightly. Turn off compressor and indoor fan. ② Drain pump is abnormal if the condition above is detected during suspensive abnormality. ③ Constantly detected during drain pump operation.	① Malfunction of drain pump ② Defective drain Clogged drain pump Clogged drain pipe ③ Attached drop of water at the drain sensor • Drops of drain trickles from lead wire. • Clogged filter is causing wave of drain. ④ Defective indoor controller board	① Check if drain pump works. ② Check drain function. ③ Check the setting of lead wire of drain sensor and check clogs of the filter. ④ Replace indoor controller board if drain pump operates with the line of drain sensor connector CN31-① and ② is short-circuited and abnormality reappears. Refer to 10-7. Turn the power off, and on again to operate after check.

Error Code	Abnormal point and detection method	Cause	Countermeasure
P6	**Freezing/overheating protection is working** ① Freezing protection (Cooling mode) The unit is in 6-minute resume prevention mode if pipe <liquid or condenser/evaporator> temperature stays under -15℃(5˚F) for 3 minutes, 3 minutes after the compressor started. Abnormal if it stays under -15℃(5˚F) for 3 minutes again within 16 minutes after 6-minute resume prevention mode. ② Overheating protection (Heating mode) The units is in 6-minute resume prevention mode if pipe <condenser / evaporator> temperature is detected as over 70℃(158˚F) after the compressor started. Abnormal if the temperature of over 70℃(158˚F) is detected again within 10 minutes after 6-minute resume prevention mode.	(Cooling or drying mode) ① Clogged filter (reduced airflow) ② Short cycle of air path ③ Low-load (low temperature) operation out of the tolerance range ④ Defective indoor fan motor • Fan motor is defective. • Indoor controller board is defective. ⑤ Defective outdoor fan control ⑥ Overcharge of refrigerant ⑦ Defective refrigerant circuit (clogs) (Heating mode) ① Clogged filter (reduced airflow) ② Short cycle of air path ③ Overload (high temperature) operation beyond the tolerance range ④ Defective indoor fan motor • Fan motor is defective. • Indoor controller board is defective. ⑤ Defective outdoor fan control ⑥ Overcharge of refrigerant ⑦ Defective refrigerant circuit (clogs) ⑧ Bypass circuit of outdoor unit is defective.	(Cooling or drying mode) ① Check clogs of the filter. ② Remove shields. ④ Measure the resistance of fan motor's winding. Measure the output voltage of fan's connector (FAN) on the indoor controller board. ※The indoor controller board should be normal when voltage of AC 208/230V is detected while fan motor is connected. Refer to 10-7. ⑤ Check outdoor fan motor. ⑥⑦ Check operating condition of refrigerant circuit. (Heating mode) ① Check clogs of the filter. ② Remove shields. ④ Measure the resistance of fan motor's winding. Measure the output voltage of fan's connector (FAN) on the indoor controller board. ※The indoor controller board should be normal when voltage of AC 208/230V is detected while fan motor is connected. Refer to 10-7. ⑤ Check outdoor fan motor. ⑥~⑧Check operating condition of refrigerant circuit.
P8	**Pipe temperature** <Cooling mode> Detected as abnormal when the pipe temperature is not in the cooling range 3 minutes after compressor start and 6 minutes after the liquid or condenser/evaporator pipe is out of cooling range. Note 1) It takes at least 9 minutes to detect. Note 2) Abnormality P8 is not detected in drying mode. Cooling range:-3 deg C[-5.4deg F]≧(TH-TH1) TH: Lower temperature between liquid pipe temperature (TH2) and condenser/ evaporator temperature (TH5) TH1: Intake temperature <Heating mode> When 10 seconds have passed after the compressor starts operation and the hot adjustment mode has finished, the unit is detected as abnormal when condenser/ evaporator pipe temperature is not in heating range within 20 minutes. Note 3) It takes at least 27 minutes to detect abnormality. Note 4) It excludes the period of defrosting (Detection restarts when defrosting mode is over) Heating range:3 deg C[5.4deg F]≦(TH5-TH1)	① Slight temperature difference between indoor room temperature and pipe <liquid or condenser / evaporator> temperature thermistor • Shortage of refrigerant • Disconnected holder of pipe <liquid or condenser / evaporator> thermistor • Defective refrigerant circuit ② Converse connection of extension pipe (on plural units connection) ③ Converse wiring of indoor/ outdoor unit connecting wire (on plural units connection) ④ Defective detection of indoor room temperature and pipe <condenser / evaporator> temperature thermistor ⑤ Stop valve is not opened completely.	①~④ Check pipe <liquid or condenser / evaporator> temperature with room temperature display on remote controller and outdoor controller circuit board. Pipe <liquid or condenser / evaporator> temperature display is indicated by setting SW2 of outdoor controller circuit board as follows. (Conduct temperature check with outdoor controller circuit board after connecting 'A-Control Service Tool(PAC-SK52ST)'.) ②③Check converse connection of extension pipe or converse wiring of indoor/outdoor unit connecting wire.

Error Code	Abnormal point and detection method	Cause	Countermeasure
P9	**Pipe temperature thermistor / Condenser-Evaporator (TH5)** ① The unit is in 3-minute resume protection mode if short/open of thermistor is detected. Abnormal if the unit does not get back to normal within 3 minutes. (The unit returns to normal operation, if it has been reset normally.) ② Constantly detected during cooling, drying, and heating operation (except defrosting) Short: 90℃(194˚F) or more Open: -40℃(-40˚F) or less	① Defective thermistor characteristics ② Contact failure of connector (CN29) on the indoor controller board (Insert failure) ③ Breaking of wire or contact failure of thermistor wiring ④ Temperature of thermistor is 90℃(194˚F) or more or -40℃ (-40˚F) or less caused by defective refrigerant circuit. ⑤ Defective indoor controller board	①–③ Check resistance value of thermistor. For characteristics, refer to (P1) above. ② Check contact failure of connector (CN29) on the indoor controller board. Refer to 10-7. Turn the power on and check restart after inserting connector again. ④ Operate in test run mode and check pipe <condenser / evaporator> temperature with outdoor controller circuit board. If pipe <condenser / evaporator> temperature is extremely low (in cooling mode) or high (in heating mode), refrigerant circuit may have defect. ⑤ Operate in test run mode and check pipe <condenser / evaporator> temperature with outdoor control circuit board. If there is exclusive difference with actual pipe <condenser / evaporator> temperature replace indoor controller board. There is no abnormality if none of above comes within the unit. Turn the power off and on again to operate. (In case of checking pipe temperature with outdoor controller circuit board, be sure to connect A-control service tool (PAC-SK52ST).)
E0 or E4	**Remote controller transmission error(E0)/signal receiving error(E4)** ① Abnormal if main or sub remote controller cannot receive any transmission normally from indoor unit of refrigerant address “0” for 3 minutes. (Error code : E0) ② Abnormal if sub-remote controller could not receive for any signal for 2 minutes. (Error code: E0) ① Abnormal if indoor controller board can not receive any data from remote controller board or normally from other indoor controller board for 3 minutes. (Error code: E4) ② Indoor controller board cannot receive any signal from remote controller for 2 minutes. (Error code: E4)	① Contact failure at transmission wire of remote controller ② All remote controllers are set as “sub” remote controller. In this case, E0 is displayed on remote controller, and E4 is displayed at LED (LED1, LED2) on the outdoor controller circuit board. ③ Miswiring of remote controller ④ Defective transmitting receiving circuit of remote controller ⑤ Defective transmitting receiving circuit of indoor controller board of refrigerant address “0” ⑥ Noise has entered into the transmission wire of remote controller.	① Check disconnection or looseness of indoor unit or transmission wire of remote controller. ② Set one of the remote controllers “main” if there is no problem with the action above. ③ Check wiring of remote controller. • Total wiring length: max. 500m (Do not use cable × 3 or more.) • The number of connecting indoor units: max. 16 units • The number of connecting remote controller: max. 2 units When the above-mentioned problem ①~③ are not seen. ④ Diagnose remote controllers. a) When “RC OK” is displayed, remote controllers have no problem. Turn the power off, and on again to check. If abnormality generates again, replace indoor controller board. b) When “RC NG” is displayed, replace remote controller. c) When “RC E3” is displayed, d) When “ERC 00-06” is displayed, [c),d)→Noise may be causing abnormality.] * If the unit is not normal after replacing indoor controller board in group control, the indoor controller board of address “0” may be abnormal.
E3 or E5	**Remote controller transmission error(E3)/signal receiving error(E5)** ① Abnormal if remote controller could not find blank of transmission path for 6 seconds and could not transmit. (Error code: E3) ② Remote controller receives transmitted data at the same time, compares the data, and when detecting it, judges different data to be abnormal 30 continuous times. (Error code: E3) ① Abnormal if indoor controller board could not find blank of transmission path. (Error code: E5) ② Indoor controller board receives transmitted data at the same time, compares the data,and when detecting it, judges different data to be abnormal 30 continuous times. (Error code: E5)	① 2 remote controller are set as “main.” (In case of 2 remote controllers) ② Remote controller is connected with 2 indoor units or more. ③ Repetition of refrigerant address ④ Defective transmitting receiving circuit of remote controller ⑤ Defective transmitting receiving circuit of indoor controller board ⑥ Noise has entered into transmission wire of remote controller.	① Set a remote controller to main, and the other to sub. ② Remote controller is connected with only 1 indoor unit. ③ The address changes to a separate setting. ④~⑥ Diagnose remote controller. a) When “RC OK” is displayed, remote controllers have no problem. Turn the power off, and on again to check. When becoming abnormal again, replace indoor controller board. b)When “RC NG” is displayed, replace remote controller. c)When “RC E3” or “ERC 00-66” is displayed, noise may be causing abnormality.

Error Code	Abnormal point and detection method	Cause	Countermeasure
E6	**Indoor/outdoor unit communication error (Signal receiving error)** ① Abnormal if indoor controller board cannot receive any signal normally for 6 minutes after turning the power on. ② Abnormal if indoor controller board cannot receive any signal normally for 3 minutes. ③ Consider the unit as abnormal under the following condition: When 2 or more indoor units are connected to 1 outdoor unit, indoor controller board cannot receive a signal for 3 minutes from outdoor controller circuit board, a signal which allows outdoor controller circuit board to transmit signals.	① Contact failure, short circuit or, miswiring (converse wiring) of indoor/outdoor unit connecting wire ② Defective transmitting receiving circuit of indoor controller board ③ Defective transmitting receiving circuit of indoor controller board ④ Noise has entered into indoor/ outdoor unit connecting wire.	* Check LED display on the outdoor control circuit board. (Connect A-control service tool, PAC-SK52ST.) For EA-EC item, refer to outdoor unit service manual. ① Check disconnection or looseness of indoor/ outdoor unit connecting wire of indoor unit or outdoor unit. Check all the units in case of twin indoor unit system. ②-④ Turn the power off, and on again to check. If abnormality generates again, replace indoor controller board or outdoor controller circuit board. * Other indoor controller board may have defect in case of twin indoor unit system.
E7	**Indoor/outdoor unit communication error (Transmitting error)** Abnormal if “1” receiving is detected 30 times continuously though indoor controller board has transmitted “0”.	① Defective transmitting receiving circuit of indoor controller board ② Noise has entered into power supply. ③ Noise has entered into outdoor control wire.	①-③ Turn the power off, and on again to check. If abnormality generates again, replace indoor controller board.
Fb	**Indoor controller board** Abnormal if data cannot be read normally from the nonvolatile memory of the indoor controller board.	① Defective indoor controller board	① Replace indoor controller board.
E1 or E2	**Remote controller control board** ① Abnormal if data cannot be read normally from the nonvolatile memory of the remote controller control board. (Error code: E1) ② Abnormal if the clock function of remote controller cannot be operated normally. (Error code: E2)	① Defective remote controller	① Replace remote controller.
PA (2502) (2500)	**Forced compressor stop (due to water leakage abnormality)** ① When the intake temperature subtracted with liquid pipe temperature is less than -10℃(14˚F), drain sensor detects whether it is soaked in the water or not at the interval of 90 seconds. (Drain pump will start operating when the drain sensor detects to be soaked in the water.) ② The unit has a water leakage abnormality when the following conditions, a and b, are satisfied while the above-mentioned detection is performed. a) The drain sensor detects to be soaked in the water 10 times in a row. b) The intake temperature subtracted with liquid pipe temperature is detected to be less than -10℃(14˚F) for a total of 30 minutes. (When the drain sensor detects to be NOT soaked in the water, the detection record of a and b will be cleared.) ③ The drain sensor detection is performed in operations other than cooling. (When the unit stops operating, during heating or fan operation, when the unit stops because of some abnormality) *Once the water leakage abnormality is detected, abnormality state will not be released until the main power is reset.	① Drain pump trouble ② Drain defective · Drain pump clogging · Drain pipe clogging ③ Open circuit of drain sensor side heater ④ Contact failure of drain sensor connector ⑤ Dew condensation on drain sensor · Drain water trikles along lead wire. · Drain water waving due to filter clogging ⑥ Extension piping connection difference at twin system ⑦ Miswiring of indoor/ outdoor connecting at twin system ⑧ Room temperature thermistor / liquid pipe temperature thermistor detection is defective.	① Check the drain pump. ② Check whether water can be drained. ③ Check the resistance of the drain sensor. ④ Check the connector contact failure. ⑤ Check the drain sensor leadwire mounted. Check the filter clogging. ⑥ Check the piping connection. ⑦ Check the indoor/ outdoor connecting wires. ⑧ Check the room temperature display of remote controller. Check the indoor liquid pipe temperature display of outdoor controller board.

10-4. TROUBLESHOOTING BY INFERIOR PHENOMENA

Note: Refer to the manual of outdoor unit for the detail of remote controller.

Phenomena	Cause	Countermeasure
(1)LED2 on indoor controller board is off.	• When LED1 on indoor controller board is also off.	
	① Power supply of rated voltage is not supplied to outdoor unit.	① Check the voltage of outdoor power supply terminal block (L1,L2). • When AC 208/230V is not detected, check the power wiring to outdoor unit and the breaker. • When AC 208/230V is detected, check ② (below).
	② Defective outdoor controller circuit board	② Check the voltage between outdoor terminal block S1 and S2. • When AC 208/230V is not detected, —check the fuse on outdoor controller circuit board. —check the wiring connection. • When AC 208/230V is detected, check ③ (below).
	③ Power supply of 208/230V is not supplied to indoor unit.	③ Check the voltage between indoor terminal block S1 and S2. • When AC 208/230V is not detected, check indoor/outdoor unit connecting wire for miswiring. • When AC 208/230V is detected, check ④ (below).
	④ Defective indoor power board	④ Check voltage output from CN2S on indoor power board (DC13.1V). Refer to 10-7-1. • When no voltage is output, check the wiring connection. • When output voltage is between DC12.5V and DC13.7V, check ⑤ (below).
	⑤ Defective indoor controller board	⑤ Check the wiring connection between indoor controller board and indoor power board. Check the fuse on indoor controller board. If no problems are found, indoor controller board is defective.
	(For the separate indoor/outdoor unit power supply system)	
	① Power supply of 208/230V AC is not supplied to indoor unit.	① Check the voltage of indoor power supply terminal block (L1,L2). • When AC208/230V is not detected, check the power supply wiring. • When AC208/230V is detected, check ② (below).
	② The connectors of the optional replacement kit are not used.	② Check that there is no problem in the method of connecting the connectors. • When there are problems in the method of connecting the connectors, connect the connector correctly referring to installation manual of an optional kit. • When there is no problem in the method of connecting the connectors, check ③ (below).
	③ Defective indoor controller board	③ Check voltage output from CNDK on indoor controller board. • When AC208/230V is not detected, —check the fuse on indoor controller board. —check the wiring connection between indoor power supply terminal block and CND on indoor controller board. • When AC208/230V is detected, check ④ (below).
	④ Defective indoor power board	④ Check voltage output from CN2S on indoor power board. • When no voltage output, check the wiring connection between CNDK on indoor controller board and CNSK on indoor power board. If no problem are found, indoor power board is defective. • When DC12.5~13.7V is detected, check the wiring connection between CN2S on indoor power board and CN2D on indoor power board. If no problem are found, indoor controller board is defective.

Note: Refer to the manual of the outdoor unit for the detail of remote controller.

Phenomena	Cause	Countermeasure
(1)LED2 on indoor controller board is off.	• When LED1 on indoor controller board is lit. ① Mis-setting of refrigerant address for outdoor unit (There is no unit corresponding to refrigerant address “0”.)	① Check again the setting of refrigerant address for outdoor unit. Set the refrigerant address to “0”. (For grouping control system under which 2 or more outdoor units are connected, set one of the units to “0”.) Set refrigerant address using SW1 (3-6) on outdoor controller circuit board.
(2)LED2 on indoor controller board is blinking.	• When LED1 on indoor controller board is also blinking. Connection failure of indoor/outdoor unit connecting wire	Check indoor/outdoor unit connecting wire for connection failure.
	• When LED1 is lit. ① Miswiring of remote controller wires Under indoor unit system, 2 indoor units are wired together. ② Refrigerant address for outdoor unit is wrong or not set. Under grouping control system, there are some units whose refrigerant address is 0. ③ Shortcut of remote controller wires ④ Defective remote controller	① Check the connection of remote controller wires in case of twin indoor unit system. When 2 or more indoor units are wired in one refrigerant system, connect remote controller wires to one of those units. ② Check the setting of refrigerant address in case of grouping control system. If there are some units whose refrigerant addresses are 0 in one group, set one of the units to 0 using SW1 (3-6) on outdoor controller circuit board. ③④ Remove remote controller wires and check LED2 on indoor controller board. • When LED2 is blinking, check the shortcut of remote controller wires. • When LED2 is lit, connect remote controller wires again and: if LED2 is blinking, remote controller is defective; if LED2 is lit, connection failure of remote controller terminal block etc. has returned to normal.
(3)Upward/downward vane performance failure	① The vane is not downward during defrosting and heat preparation and when the thermostat is OFF in HEAT mode. (Working of COOL protection function) ② Vane motor does not rotate. • Defective vane motor • Breaking of wire or connection failure of connector • Up/downward vane setting is “No vanes”. ③ Upward/downward vane does not work. • The vane is set to fixed position.	① Normal operation (The vane is set to horizontal regardless of remote control.) ② Check ② (left). • Check the vane motor. (Refer to “How to check the parts”.) • Check for breaking of wire or connection failure of connector. • Check “Up/down vane setting”. (Unit function selection by remote controller). ③ Normal operation (Each connector on vane motor side is disconnected.)
(4)Receiver for wireless remote controller	① Weak batteries of wireless remote controller ② Contact failure of connector (CNB) on wireless remote controller board(Insert failure) ③ Contact failure of connector (CN90) on indoor controller board(Insert failure) ④ Contact failure of connector between wireless remote controller board and indoor controller board	① Replace batteries of the wireless remote controller. ②~④ Check contact failure of each connector. If no problems are found in connector, replace indoor controller board. When the same trouble occurs even if indoor controller board is replaced, replace wireless remote controller board.

10-5. EMERGENCY OPERATION

10-5-1. When wireless remote controller has troubles or its battery is exhausted

1. Emergency operation is available in such a case using emergency operation switch equipped next to the receiver of indoor unit.
2. To start operation
   - Cooling Operation·····Press (Cooling) switch.
   - Heating Operation·····Press (Heating) switch.

※When the unit starts operating, the operation lamp is lit.

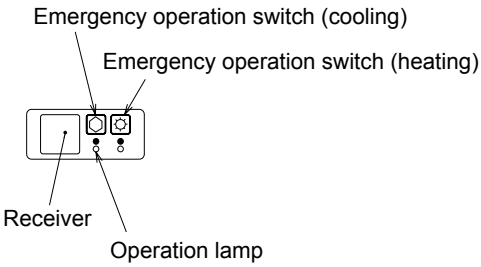

※Emergency operation will be performed as follows.

Mode	Cooling	Heating
Set temperature	24℃, 75°F	24℃, 75°F
Fan speed	High	High
Airflow direction	Horizontal (30deg)	Downward (70deg)

3. To stop operation
   - Press either emergency operation switch (cooling/heating).

10-5-2. When wired remote controller or indoor unit microcomputer has troubles

1. If other defects are not found when trouble occurs, emergency operation starts as the indoor controller board switch (SWE) is set to ON.
   During the emergency operation the indoor unit is as follows;
   · Indoor fan high speed operation

2. For emergency operation of cooling or heating
   When emergency operation for COOL or HEAT, setting of the switch (SWE) in the indoor controller board and outdoor unit emergency operation are necessary.

3. Check items and notices as the emergency operation
   (1) Emergency operation cannot be used as follows;
      - When the outdoor unit is something wrong
      - When the indoor fan is something wrong
      - When drain over flow protection operation is detected during self-diagnosis (Error code : P5)
   (2) Emergency operation will be serial operation by the power supply ON/OFF.
      ON/OFF or temperature, etc. adjustment is not operated by the remote controller.
   (3) Do not operate for a long time as cold air is blown when the outdoor unit starts defrosting operation during heat emergency operation.
   (4) Cool emergency operation must be within 10 hours. Otherwise, heat exchanger of indoor unit may get frosted.
   (5) After completing the emergency operation, return the switch setting, etc. in former state.
   (6) Since vane does not work at emergency operation, position the vane slowly by hand.

10-6. HOW TO CHECK THE PARTS

PKA-A12/ 18GA PKA-A24/ 30/ 36FA PKA-A12/ 18GAL PKA-A24/ 30/ 36FAL
PKA-A12/ 18GA$_1$ PKA-A24/ 30/ 36FA$_1$ PKA-A12/ 18GAL$_1$ PKA-A24/ 30/ 36FAL$_1$
PKA-A12/ 18GA$_2$ PKA-A24/ 30/ 36FA$_2$ PKA-A12/ 18GAL$_2$ PKA-A24/ 30/ 36FAL$_2$

Parts name	Check points
Room temperature thermistor (TH1) Pipe temperature thermistor (TH2) Condenser/evaporator temperature thermistor (TH5)	Disconnect the connector then measure the resistance with a tester. (At the ambient temperature 10℃ (50°F)~30℃ (86°F)) Normal: 4.3kΩ~9.6kΩ Abnormal: Open or short (Refer to Thermistor Characteristic graph.)
Fan motor (MF) 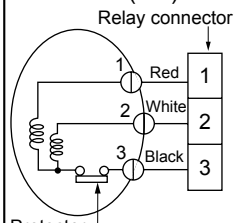 Protector OFF:125±5℃ ON :79±15℃ (A12/ 18GA(L) only) OFF:130±5℃ ON :80±20℃ (A24/ 30/ 36FA(L) only)	Measure the resistance between the terminals with a tester. (Winding temperature 20℃ (68°F)) Motor terminal or Relay connector: Red–Black; White–Black Normal: PKA-A12, 18GA(1)(2) / PKA-A12, 18GAL(1)(2): Red–Black 141.2Ω, White–Black 131.5Ω Normal: PKA-A24, 30FA(1)(2) / PKA-A24, 30FAL(1)(2): Red–Black 107.4Ω, White–Black 97.7Ω Normal: PKA-A36FA(1)(2) / PKA-A36FAL(1)(2): Red–Black 69.7Ω, White–Black 95.5Ω Abnormal: Open or short
Vane motor (MV) 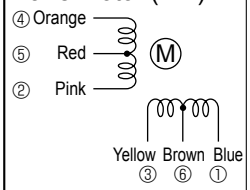 	Measure the resistance between the terminals with a tester. (At the ambient temperature 20℃ (68°F)~30℃ (86°F)) Connector: Brown–Yellow, Brown–Blue, Red–Orange, Red–Pink Normal: 186~214Ω Abnormal: Open or short

<Thermistor characteristic graph>

Thermistor for lower temperature

Room temperature thermistor(TH1)
Pipe temperature thermistor(TH2)
Condenser/evaporator temperature thermistor(TH5)

Thermistor R_0=15kΩ ± 3%
Fixed number of B=3480 ± 2%

$$t(℃): Rt=15\exp\left\{3480\left(\frac{1}{273+t}-\frac{1}{273}\right)\right\}$$

$$T(^\circ F): Rt=15\exp\left\{3480\left(\frac{1}{273+\frac{T-32}{1.8}}-\frac{1}{273}\right)\right\}$$

0℃ (32˚F)	15kΩ
10℃ (50˚F)	9.6kΩ
20℃ (68˚F)	6.3kΩ
25℃ (77˚F)	5.4kΩ
30℃ (86˚F)	4.3kΩ
40℃ (104˚F)	3.0kΩ

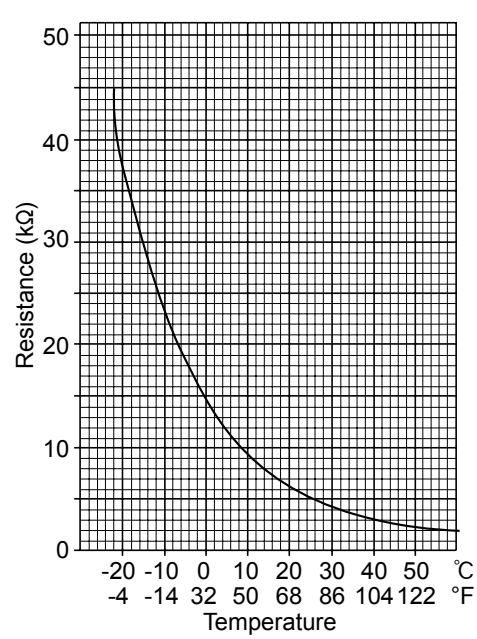

10-7. TEST POINT DIAGRAM

10-7-1. Indoor controller board

PKA-A12GA	**PKA-A18GA**	**PKA-A24FA**	**PKA-A30FA**	**PKA-A36FA**
PKA-A12GAL	**PKA-A18GAL**	**PKA-A24FAL**	**PKA-A30FAL**	**PKA-A36FAL**
PKA-A12GA$_1$	**PKA-A18GA$_1$**	**PKA-A24FA$_1$**	**PKA-A30FA$_1$**	**PKA-A36FA$_1$**
PKA-A12GAL$_1$	**PKA-A18GAL$_1$**	**PKA-A24FAL$_1$**	**PKA-A30FAL$_1$**	**PKA-A36FAL$_1$**
PKA-A12GA$_2$	**PKA-A18GA$_2$**	**PKA-A24FA$_2$**	**PKA-A30FA$_2$**	**PKA-A36FA$_2$**
PKA-A12GAL$_2$	**PKA-A18GAL$_2$**	**PKA-A24FAL$_2$**	**PKA-A30FAL$_2$**	**PKA-A36FAL$_2$**

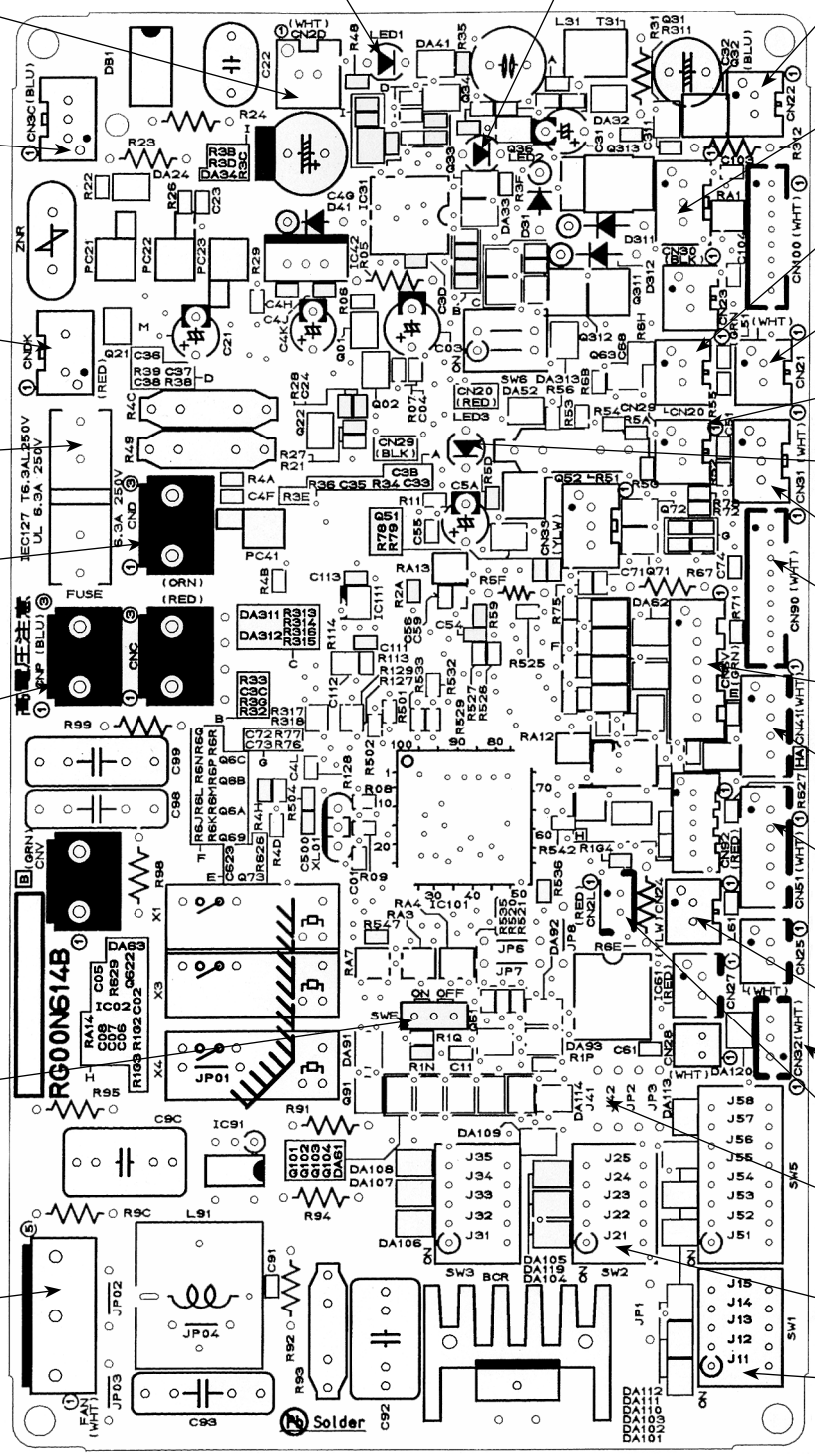

10-7-2. Indoor power board

PKA-A12GA	**PKA-A12GAL**	**PKA-A12GA$_1$**	**PKA-A12GAL$_1$**	**PKA-A12GA$_2$**	**PKA-A12GAL$_2$**
PKA-A18GA	**PKA-A18GAL**	**PKA-A18GA$_1$**	**PKA-A18GAL$_1$**	**PKA-A18GA$_2$**	**PKA-A18GAL$_2$**
PKA-A24FA	**PKA-A24FAL**	**PKA-A24FA$_1$**	**PKA-A24FAL$_1$**	**PKA-A24FA$_2$**	**PKA-A24FAL$_2$**
PKA-A30FA	**PKA-A30FAL**	**PKA-A30FA$_1$**	**PKA-A30FAL$_1$**	**PKA-A30FA$_2$**	**PKA-A30FAL$_2$**
PKA-A36FA	**PKA-A36FAL**	**PKA-A36FA$_1$**	**PKA-A36FAL$_1$**	**PKA-A36FA$_2$**	**PKA-A36FAL$_2$**

CN2S
Connect to the indoor controller board (CN2D)
between ① to ③ 12.6-13.7V DC (Pin① (+))

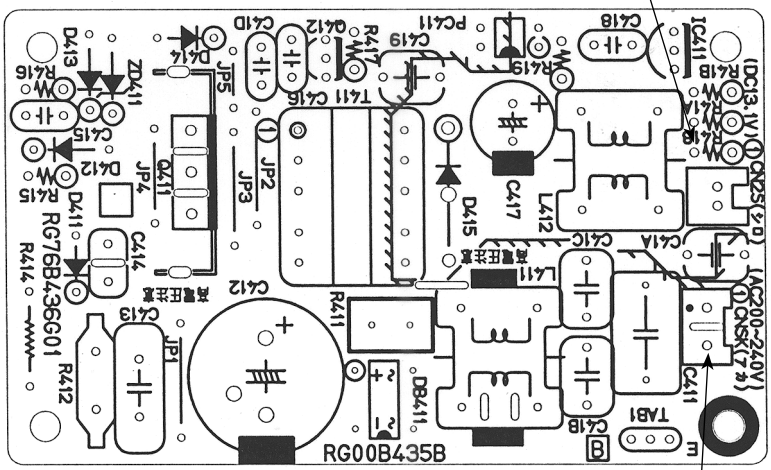

CNSK
Connect to the indoor controller board (CNDK)
between ① to ③ 208/230V AC

10-8. FUNCTIONS OF DIP SWITCH AND JUMPER WIRE

Each function is controlled by the dip switch and the jumper wire on control P.C. board.
SW1 and SW2 are equipped only for service parts.
Model setting and capacity setting are memorized in the nonvolatile memory of the control P.C. board of the unit.

(Marks in the table below) Jumper wire (○ : Short × : Open)

Jumper wire	Functions	Setting by the dip switch and jumper wire	Remarks
SW1	Model settings	For service board PKA-A12,18GA(1)(2) PKA-A12,18GAL(1)(2) PKA-A24,30,36FA(1)(2) PKA-A24,30,36FAL(1)(2) 	
SW2	Capacity settings	MODELS / Service board PKA-A12GA(1)(2) PKA-A12GAL(1)(2) PKA-A18GA(1)(2) PKA-A18GAL(1)(2) 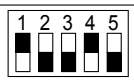 PKA-A24FA(1)(2) PKA-A24FAL(1)(2) PKA-A30FA(1)(2) PKA-A30FAL(1)(2) 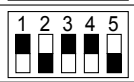 PKA-A36FA(1)(2) PKA-A36FAL(1)(2) 	
J41 J42	Pair number setting with wireless remote controller	Wireless remote controller setting / Control PCB setting 0: J41 ○, J42 ○ 1: J41 ×, J42 ○ 2: J41 ○, J42 × 3 ~ 9: J41 ×, J42 ×	<Initial setting> Wireless remote controller: 0 Control PCB: ○ (for both J41 and J42) Four pair number settings are supported. The pair number settings of the wireless remote controller and indoor control PCB (J41/J42) are given in the table on the left. ('×' in the table indicates the jumper wire is disconnected.)
JP1	Unit type setting	Model / JP1 Without TH5: ○ With TH5: ×	There is no jumper (JP1) because these models have the cond./eva. temperature thermistor (TH5).
JP3	Indoor controller board type setting	Indoor controller board type / JP3 For product: × Service parts: ○	

11 SPECIAL FUNCTION

11-1. ROTATION FUNCTION(AND BACK-UP FUNCTION, 2ND STAGE CUT-IN FUNCTION)

11-1-1. Operation

(1) Rotation function(and Back-up function)

Outline of functions

· Operating the unit of main and sub alternately according to the interval setting. (Rotation function)

※The setting of main/sub unit depends on the refrigerant address.(The setting of dip switch on the outdoor unit)

Refrigerant address"00" ⟶ Main unit

Refrigerant address"01" ⟶ Sub unit

· If an error occurrs to one unit, the other unit starts.(Back-up function)

System constraint

· This function is available only by the grouping control system(INDOOR UNIT : OUTDOOR UNIT=1:1) of 2 refrigerant group.(Refer to Fig 1)

· It is necessary to connect remote controller crossover wiring to between units(Wireless remote controller is unusable) and to assign refrigerant address to each unit.(Dip switch on the outdoor unit…Refrigerant address 00/01)

Operation pattern

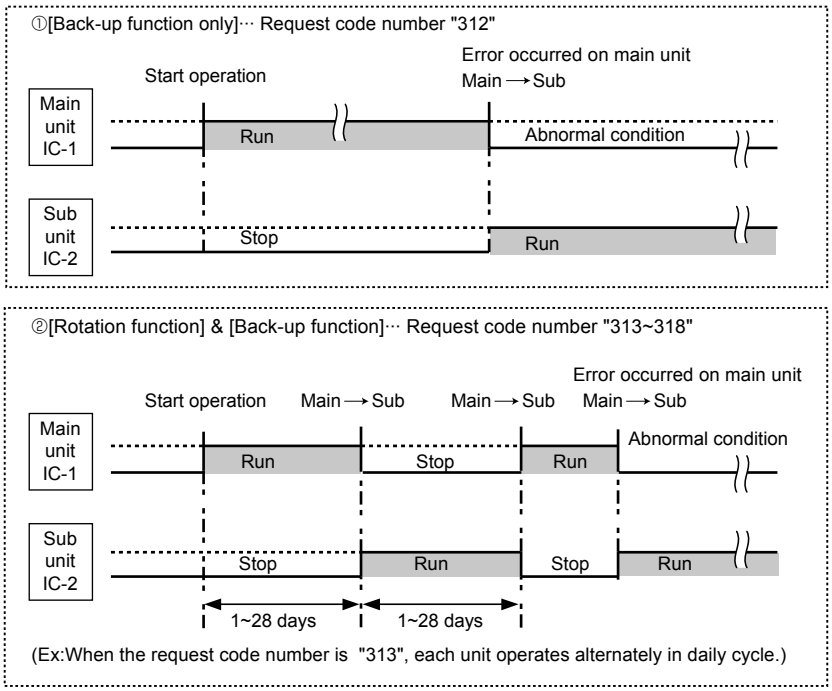

Fig 1

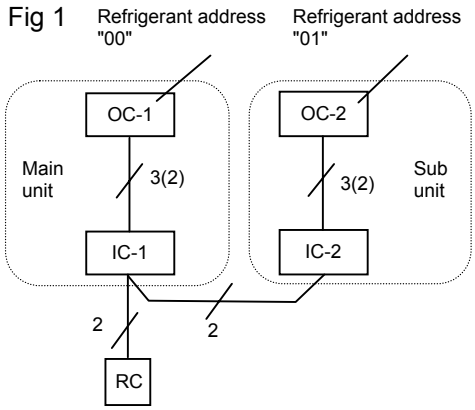

OC: Outdoor unit
IC: Indoor unit
RC: Wired remote controller

(2) 2nd stage cut-in function

Outline of functions

· Quantity of operating units is controlled according to the room temperature and set point.

· When room temperature becomes more than set point, standby unit starts.(2 units running)

· When room temperature falls below set point -4℃(7.5°F), standby unit stops.(1 unit running)

System constraint

· This function is available only in rotation operation(or back-up) and cooling mode.

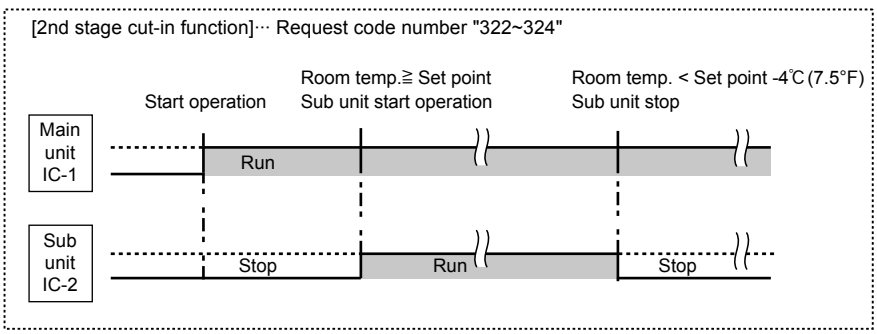

11-1-2.How to perform the operation of rotation function(Back-up funcion, 2nd stage cut-in function)
Set by wired remote controller.(Maintenance monitor)

NOTE
It is necessary to set the same content to both main unit and sub unit.
Every time indoor controller board is replaced for servicing, it is necessary to set each function.

(1) Request Code List

Rotation setting

Setting No. (Request code)	Setting contents	Initial setting
No.1 (310)	Monitoring the request code of current setting.	
No.2 (311)	Rotation and Back-up OFF (Normal group control operation)	◎
No.3 (312)	Back-up function only	
No.4 (313)	Rotation ON (Alternating interval = 1day) and back-up function	
No.5 (314)	Rotation ON (Alternating interval = 3days) and back-up function	
No.6 (315)	Rotation ON (Alternating interval = 5days) and back-up function	
No.7 (316)	Rotation ON (Alternating interval = 7days) and back-up function	
No.8 (317)	Rotation ON (Alternating interval = 14days) and back-up function	
No.9 (318)	Rotation ON (Alternating interval = 28days) and back-up function	

2nd stage cut-in setting

Setting No. (Request code)	Setting contents	Initial setting
No.1 (320)	Monitoring the request code of current setting.	
No.2 (321)	Cut-in function OFF	◎
No.3 (322)	Cut-in function ON (Set point = Set temp. +4℃(7.2°F))	
No.4 (323)	Cut-in function ON (Set point = Set temp. +6℃(10.8°F))	
No.5 (324)	Cut-in function ON (Set point = Set temp. +8℃(14.4°F))	

(2) Setting method of each function by wired remote controller

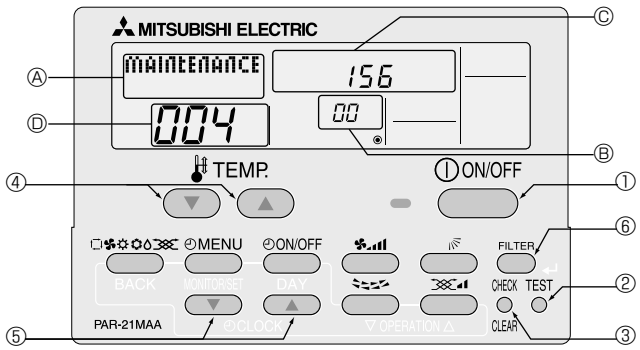

B: Refrigerant address
C: Data display area
D: Request code display area

1. Stop running the air-conditioner(①).

2. Press the (TEST) button (②) for 3 seconds so that [Maintenance mode] appears on the screen (at Ⓐ).
   ⟶After a while, [00] appears in the refrigerant address number display area.(at Ⓑ)

3. Press the (CHECK) button (③) for 3 seconds to switch to [Maintenance monitor].
   Note) It is not possible to switch to [Maintenance monitor] during data request in maintenance mode
   (i.e., while"----" is blinking) since no buttons are operative.

   [----] appears on the screen (at Ⓓ) when [Maintenance monitor] is activated.
   (The display (at Ⓓ) now allows you to set a request code No.)

4. Press the [TEMP (▽ and △)] buttons (④) to select the desired refrigerant address.

   [ScreenⒷ] → 00 ⟷ 01 ⟷ ····· ⟷ 15 ←

5. Press the [CLOCK (▽ and △)] buttons (⑤) to set the desired request code No.("311~318", "321~324", "331~335")
6. Press the (FILTER) button (⑥) to perform function setting.
   ⟶If the above operations are set correctly, request code number will appear in data display area.(at Ⓒ)
   [Example) When the request code number is "311", [311] appears on the screen.(at Ⓒ)]

[Refererence]
You can check the request code number of current setting by setting the request code number ("310", "320" or "330") and press the (FILTER) button.(⑥)
[Example) When the current setting is "Setting No.2(Request code 311)", [311] appears on the screen.(at Ⓒ)]

7. To return to normal mode, press the (ΦON/OFF) button (①).

11-2. BACK-UP HEATING FUNCTION(CN24)

11-2-1. Operation

Outline of functions

The back-up heater signal is sent out according to the temperature difference between indoor room temperature and set temperature. This function is available only in heating operation.

	Temperature difference (Z=Set temp. - Room temp.)	Back-up heater signal output
1	Z ≦ 0℃(°F)	OFF
2	0 < Z < 2.5℃(4.5°F)	Keeping condition
3	2.5℃(4.5°F) ≦ Z	ON

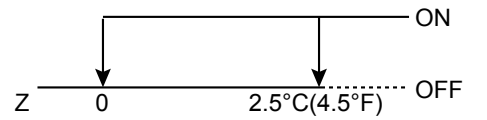

11-2-2. How to connect

When connecting to the connector CN24 of the indoor unit, use PAC-SE56RA-E(optional parts).

12 DISASSEMBLY PROCEDURE

PKA-A12GA PKA-A18GA PKA-A12GA$_1$ PKA-A18GA$_1$ PKA-A12GA$_2$ PKA-A18GA$_2$
PKA-A12GAL PKA-A18GAL PKA-A12GAL$_1$ PKA-A18GAL$_1$ PKA-A12GAL$_2$ PKA-A18GAL$_2$

OPERATION PROCEDURE	PHOTOS & ILLUSTRATION
1. REMOVING THE LOWER SIDE OF THE INDOOR UNIT FROM THE INSTALLATION PLATE. (1) Remove the left / right corner box of the indoor unit. (2) Hold and pull down the lower and both ends of the indoor unit, and remove the ▼ section from the square hole. (Refer to the figure 2.1) Or remove the front panel and push the ▼ section down by using hexagonal wrench ,etc. from the front side. (Refer to the figure 2.2). (3) Unhook the top of the indoor unit from the back plate catch. **Figure 2.2** 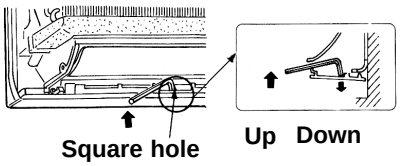 	**Figure 1** 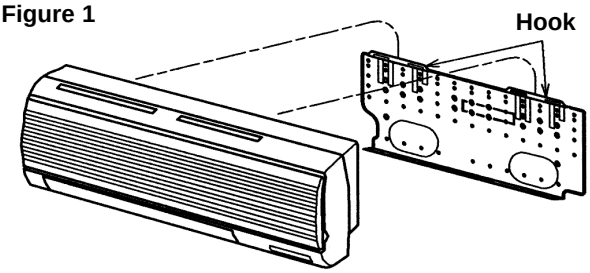 **Figure 2.1** 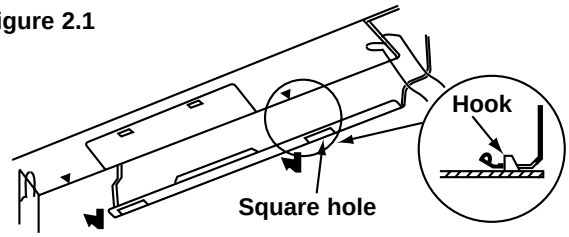
2. REMOVING THE FRONT PANEL. (1) Open the front grille. (2) Remove the terminal block cover with a screw. (3) Remove the 3 screw caps then remove the 3 set screws. (4) After removing the lower side of the front panel a little, remove it as pulling toward upper.	**Figure 3** 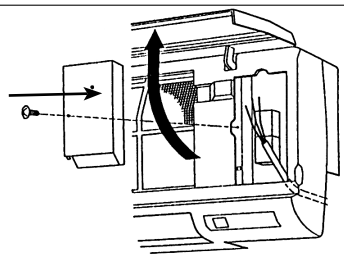 **Photo 1** 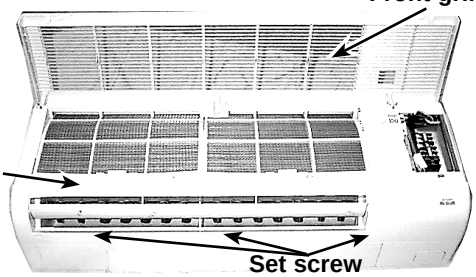
3. REMOVING THE INDOOR CONTROLLER BOARD. (1) Remove the terminal block cover. (2) Remove the front panel. (see the photo 1) (3) Remove the electrical parts box(2 screws). (4) Remove the electrical parts box cover(1 screw). (5) Disconnect the connector on the controller board and remove the controller board by pulling up the hook of the controller case. ※For smooth works, hang the side hooks of the electrical parts box on the hook of the motor cover. (see the photo 3)	**Photo 2** 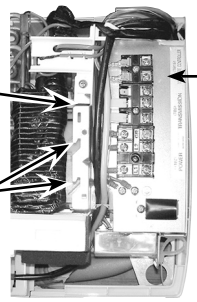 **Photo 3** 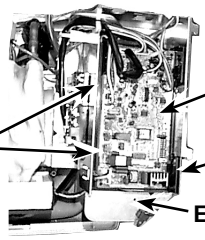

OPERATION PROCEDURE	PHOTOS & ILLUSTRATION
4. REMOVING THE POWER BOARD (1) Remove the front panel. (see the photo 1) (2) Remove the electrical parts box(2 screws). (see the photo 2) (3) Disconnect the whole connector in the control board. (4) After lifting the controller case with pressing its convex section, remove the controller case and the control board simultaneously. (see the photo 3) (5) Disconnect the connector in the power board. (6) Remove the power board.	**Photo 4** 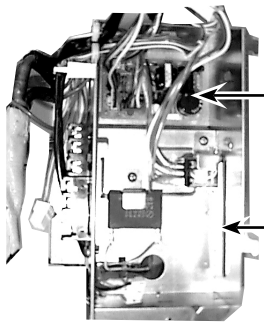 **Power board** **Electrical parts box**
5. REMOVING THE VANE MOTOR (1) Disconnect the connector CN6V on the indoor controller board. (2) Remove the 2 screws of the vane motor, disconnect the lead wire and remove the vane motor from the shaft.	**Photo 5** **Nozzle assemble** 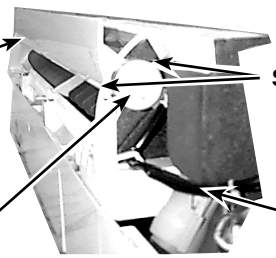 **Set screws** **Lead wire** **Vane motor**
6. REMOVING THE THERMISTOR (1) Removing the room temperature thermistor TH1. ①Disconnect the connector CN20<red> on the indoor controller board. ②Remove the room temperature thermistor from the holder. (2) Removing the pipe temperature thermistor TH2. ①Disconnect the connector CN21<white> on the controller board. ②Remove the pipe temperature thermistor set to the pipe. (3) Removing the indoor coil temperature thermistor TH5. ①Disconnect the connector CN29<black> on the indoor controller board. ②Remove the gas pipe thermistor set to the pipe.	**Photo 6** **Pipe temperature thermistor (TH2)** **Room temperature thermistor (TH1)** 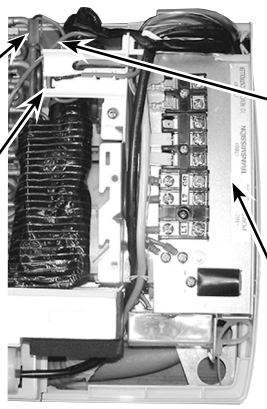 **Condenser /evaporator temperature thermistor (TH5)** **Electrical parts box**
7. REMOVING THE NOZZLE ASSEMBLE (1) Disconnect the connector CN6V on the controller board. (2) Disconnect the lead wire of the vane motor. (3) Remove the corner cover. (4) Pull the drain hose out from the nozzle assembly. (5) Unhook the hook of the lower nozzle assembly and pull the nozzle assembly toward you, then remove the nozzle assembly by sliding it down.	**Photo 7** 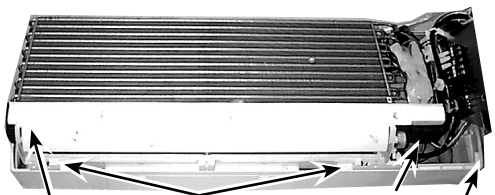 **Hook** **Drain hose** **Nozzle assemble** **Corner cover**
8. REMOVING THE ELECTRICAL PARTS BOX (1) Remove the terminal block cover. (2) Disconnect the connector <yellow> of the wireless remote controller board. (3) Remove the front panel. (see the photo 1) (4) Disconnect the vane motor connector. (5) Disconnect the fan motor connector from the fan motor. (6) Disconnect the connector <yellow> of the heater. (only PKH). (7) Remove the liquid(TH2) / gas(TH5) pipe thermistors. (see the photo 6) (8) Remove the electrical parts box (2screws).	**Photo 8** **Vane motor connector** **Pipe temperature thermistor** 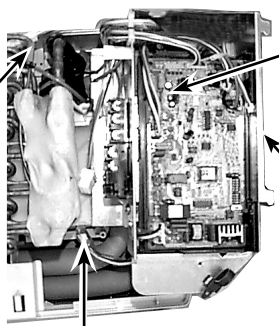 **Electrical parts box** **Fan motor connector**

OPERATION PROCEDURE	PHOTOS & ILLUSTRATION
9. REMOVING THE FAN MOTOR (1) Remove the terminal block cover. (2) Disconnect the connector <yellow> of the wireless remote controller board. (3) Remove the front panel. (see the photo 1) (4) Remove the electrical parts box. (see the photo 8) (5) Remove the nozzle assemble. (see the photo 7) (6) Remove the fan motor leg fixing 3 screws. (7) Unscrew the set screws by using hexagonal wrench and remove it by sliding the fan motor to right. (8) Remove the 4 screws and remove the motor cover from the fan motor leg.	**Photo 9** 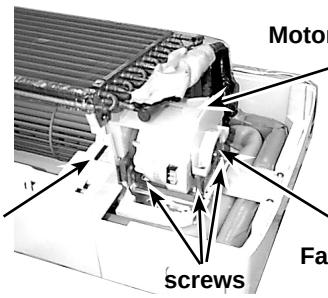 **Photo 10** 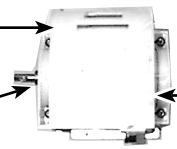
10. REMOVING THE LINE FLOW FAN (1) Remove the terminal block cover. (2) Remove the front panel. (see the photo 1) (3) Remove the electrical parts box. (see the photo 8) (4) Remove the nozzle assemble. (see the photo 7) (5) Remove the fan motor. (see the photo 9) (6) Remove the pipe fixture with 2 screws. (see the photo12) (7) Remove the left / right screws of the heat exchanger and pull the left-hand side up. (8) Remove the 2 screws by sliding it toward you remove the fixture(fixing bearing). ※ The fan motor is removable first,when the fan removing is hard. ※ When resetting the fan to the fan motor. Locate and fix the shaft after installing the fan.	**Photo11** 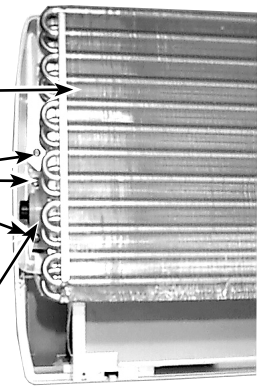
11. REMOVING THE HEAT EXCHANGER (1) Remove the terminal block cover. (2) Disconnect the connector <yellow> of the wireless remote controller board. (3) Remove the front panel. (see the photo 1) (4) Remove the electrical parts box. (see the photo 8) (5) Remove the corner box. (6) Remove the nozzle assemble. (see the photo 7) (7) Remove the 2 screws and the pipe fixture. (8) Remove the 2 screws and heat exchanger.	**Photo 12** 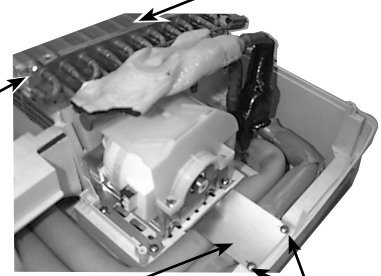
12. REMOVING THE SIGNAL RECEIVING P.C. BOARD FOR (PKA-A12GAL(1), PKA-A18GAL(1)) (1) Remove the terminal block cover. (2) Disconnect the connector <yellow> for the wireless remote controller. (3) Remove the front panel. (see the photo 1) (4) Remove the 2 screws and signal receiving P.C. board cover. (5) Remove the signal receiving P.C. board.	**Photo 13** 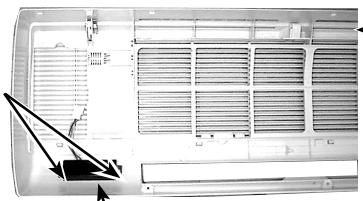 **Photo 14** 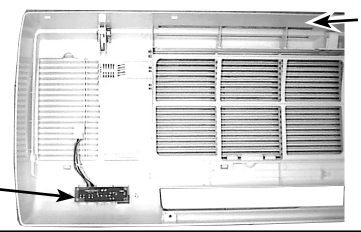

PKA-A24FA PKA-A30FA PKA-A24FAL PKA-A30FAL PKA-A36FA PKA-A36FAL
PKA-A24FA1 PKA-A30FA1 PKA-A24FAL1 PKA-A30FAL1 PKA-A36FA1 PKA-A36FAL1
PKA-A24FA2 PKA-A30FA2 PKA-A24FAL2 PKA-A30FAL2 PKA-A36FA2 PKA-A36FAL2

OPERATING PROCEDURE	PHOTOS&ILLUSTRATION
1. Removing the lower side of the indoor unit from the installation plate (1) Remove the 2 screws. Hang the indoor unit hangers to the catches on the installation plate. 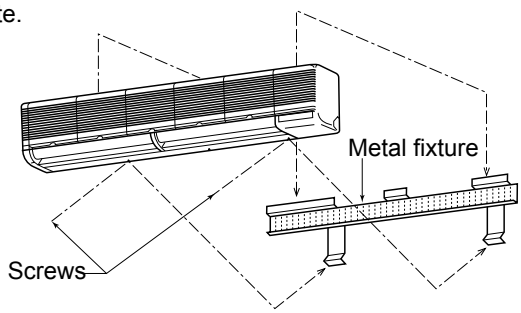 	**Figure 1** 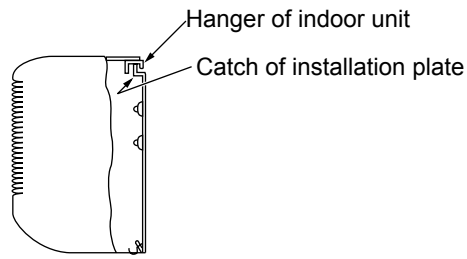
2. Removing the right side panel (1) Remove the 2 screws of the right side panel:one on the bottom and the other on the upper right-hand side. (2) Disconnect the connector from the adaptor case. (3) Sliding the right side panel to the right, pull it out toward you.	**Figure 2** 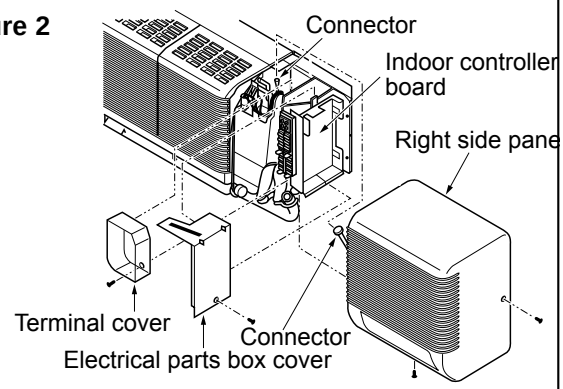
3. Removing the indoor controller board (1) Remove the right side panel. (2) Remove the screw of the electrical parts box cover, and remove the cover. (3) Disconnect the connectors on the indoor controller board. (4) To unhook the catches on the right-hand side of the indoor controller board, pull the left-hand side toward you and lift up the cover to the right. Then the indoor controller board can be removed.	**Photo 1** 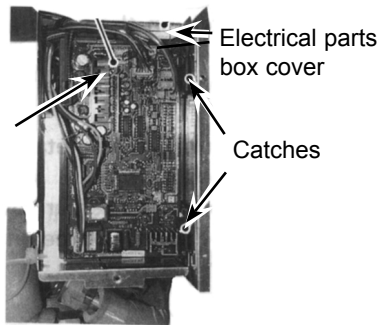
4. Removing the electrical parts box (1) Remove the right side panel. (2) Remove the screw of the electrical parts box cover, and remove the cover. (3) Remove the room temperature thermistor and the condenser / evaporator temperature thermistor. (4) Disconnect the vane motor connector on the indoor controller board. (5) Remove the 2 screws of the electrical parts box. (6) Disconnect the connector of the heater lead wire connector. (7) Disconnect the connector of the fan motor lead wire. (8) Remove the electrical parts box.	**Photo 2** 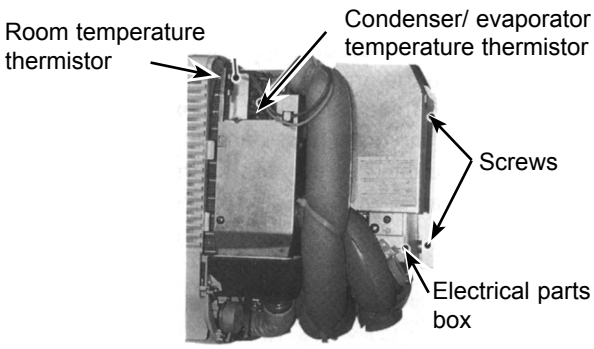

OPERATING PROCEDURE	PHOTOS&ILLUSTRATION
(9) Remove the screws of the indoor controller board case, and pull out the indoor controller board case. Then the indoor power board, the fan motor capacitor and the heater relay can be serviced.	**Photo 3** 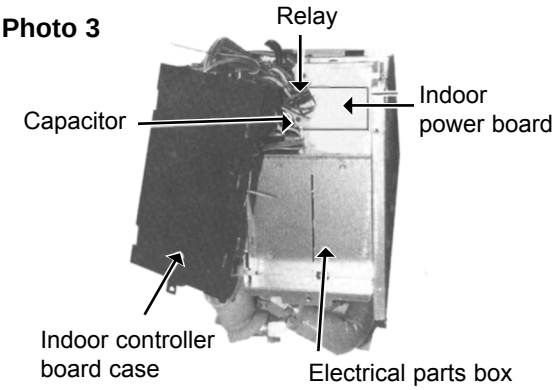
5. Removing the vane motor (1) Remove the right side panel. (2) Remove the screw of the electrical parts box cover, and remove the cover. (3) Remove the 2 screws of the vane motor, and remove the motor from the shaft. (4) Disconnect the vane motor connector on the indoor controller board.	**Photo 4** 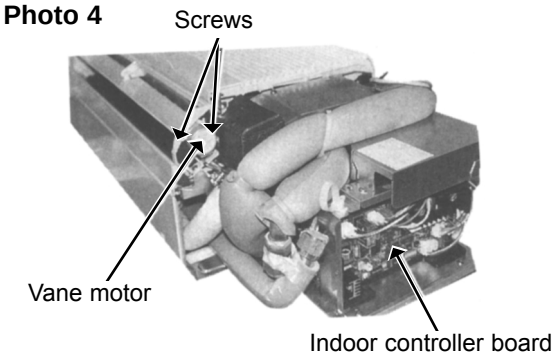
6. Removing the intake grilles (1) Remove the right side panel. (2) To remove the left side panel, remove the screw on the bottom and the screw on the upper left-hand side. (See Figure 3.) 1. Press up this side of the left side panel to unhook the catch on the panel from the catch on the unit. 2. Slide the left side panel to the left to remove the panel. Note: Fix the unit to the metal fixture securely. (3) Remove the air filters. (4) Hold and press the centre cover to remove. (5) Remove the screws of the grills. (6) Pull the lower side of the grille toward you and slide the upper side to the right to remove the grilles.	**Figure 3** 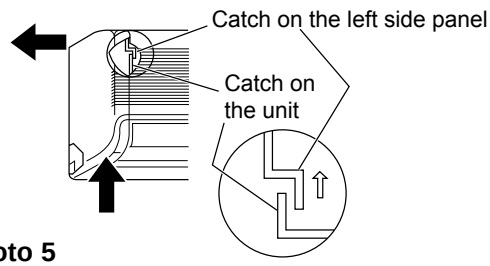 **Photo 5** 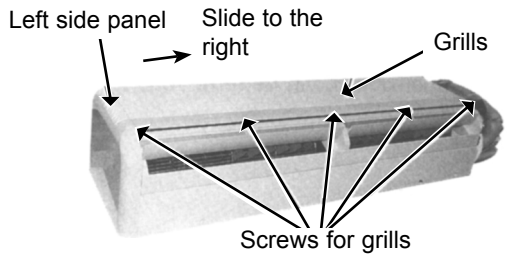
7. Removing the drain pan (1) Remove the left and right side panels. (2) Remove the grilles. (3) Remove the electrical parts box cover. (4) Loosen the drain hose band to remove. (5) Remove the 3 screws of the drain pan, and slide the drain pan toward you to remove.	**Photo 6** 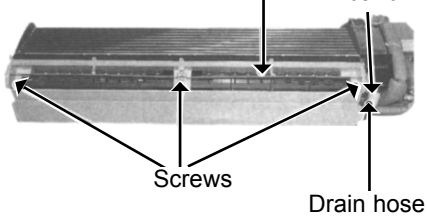

OPERATING PROCEDURE	PHOTOS

8. Removing the line flow fan and the fan motor

(1) Remove the left and right side panels.
(2) Remove the grills.
(3) Remove the electrical parts box.
(4) Remove the drain pan.
(5) Loosen the screw that fixes the line flow fan to the fan motor. (See Photo 7.)
(6) Remove the 4 screws of the motor fixture, and remove the fan motor and the motor fixture at a time (See Photo 8.)
(7) Remove the screws of the left and right motor supports, and remove the motor supports and the fan motor. (See Photo 9.)
(8) Remove the 2 screws on the left and right sides of the heat exchanger, and pull the bearing support toward you. (See Photo 11.)
(9) Remove the screw of the centre support, and remove the support. (See Photo 10.)
(10) Pull the left-hand side of the heat exchanger toward you, and remove the line flow fan.

Photo 7

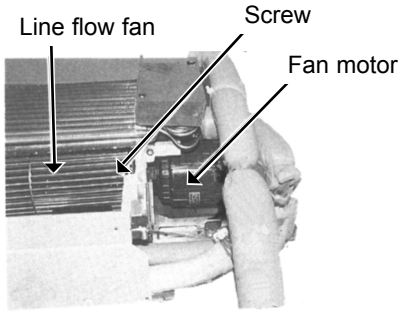

Photo 8

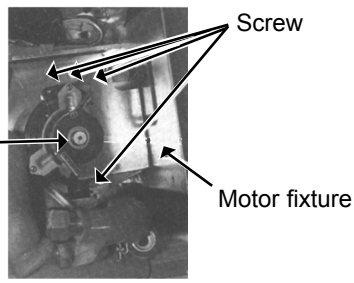

Photo 9

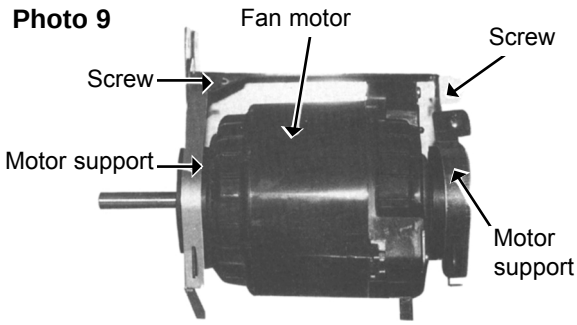

Photo 10

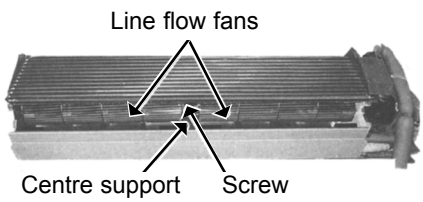

Photo 11

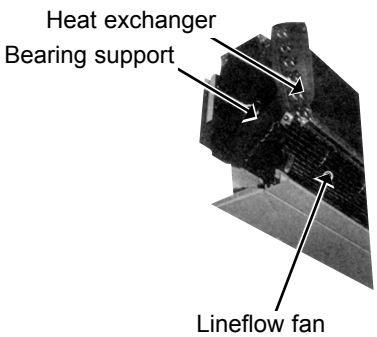

Photo 12

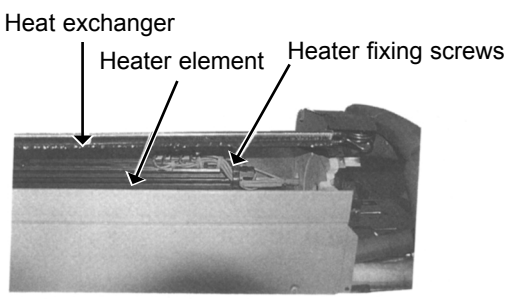

13 PARTS LIST (non-RoHS compliant)

ELECTRICAL PARTS
PKA-A12GA PKA-A12GAL
PKA-A18GA PKA-A18GAL

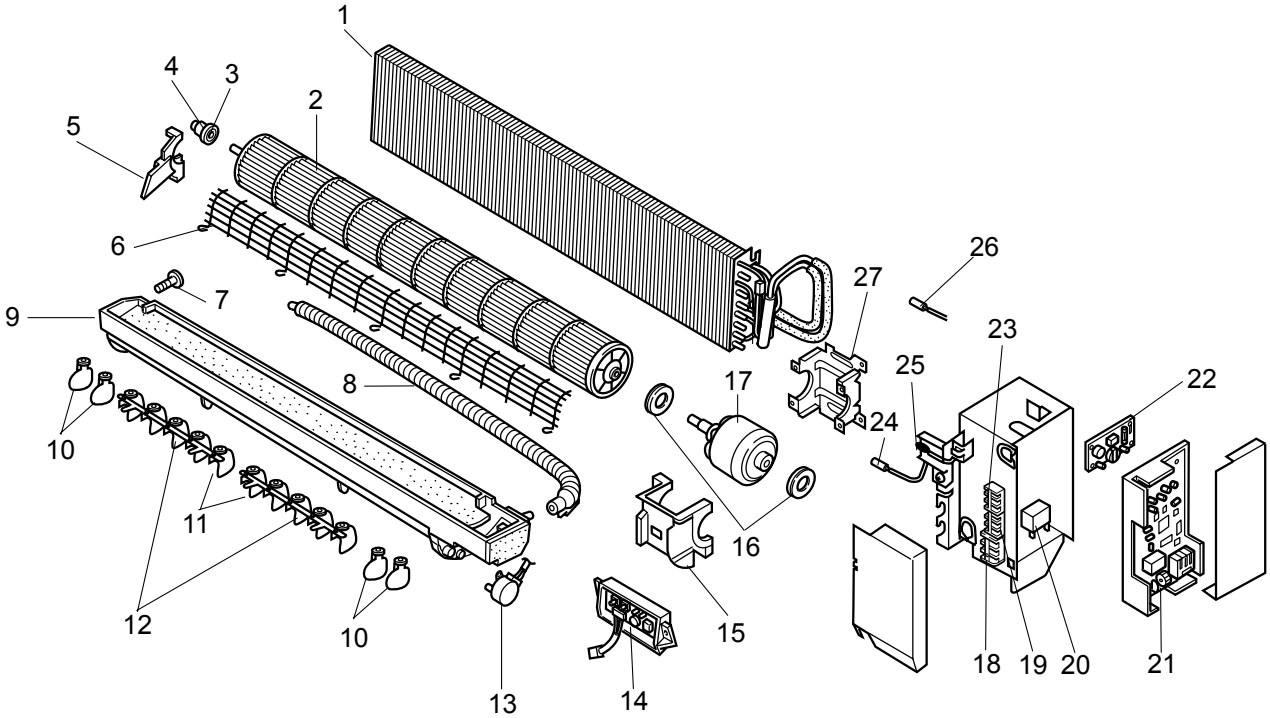

No.	Parts No.	Parts Name	Specifications	Q'ty/set PKA-A 12,18GA	Q'ty/set PKA-A 12, 18GAL	Remarks (Drawing No.)	Wiring Diagram Symbol	Recom-mended Q'ty
1	T7W H28 480	HEAT EXCHANGER		1	1			
2	R01 E22 114	LINE FLOW FAN		1	1			
3	R01 07Y 102	BEARING MOUNT		1	1			
4	R01 005 103	SLEEVE BEARING		1	1			
5	R01 07Y 106	BEARING SUPPORT		1	1			
6	T7W A00 675	FAN GUARD		1	1			
7	R01 07Y 524	DRAIN PLUG		1	1			
8	R01 07Y 527	DRAIN HOSE		1	1			
9	R01 07Y 530	NOZZLE		1	1			
10	R01 09Y 038	GUIDE VANE		4	4			
11	R01 07Y 038	GUIDE VANE		10	10			
12	R01 07Y 059	ARM		2	2			
13	R01 E04 223	VANE MOTOR		1	1		MV	
14	R01 E03 317	WIRERLESS ADAPTER CONTROLLER BOARD			1		W.B	
15	R01 07Y 135	MOTOR COVER		1	1			
16	R01 07Y 105	RUBBER MOUNT		2	2			
17	T7W E23 762	FAN MOTOR	PM4V30-K	1	1		MF	

Continued to the next page

From the previous page

No.	Parts No.	Parts Name	Specifications	Q'ty/set PKA-A 12, 18GA	Q'ty/set PKA-A 12, 18GAL	Remarks (Drawing No.)	Wiring Diagram Symbol	Recom-mended Q'ty
18	T7W E11 716	TERMINAL BLOCK	3P(L1,L2,GR)	1	1		TB2	
19	R01 E13 246	TERMINAL BLOCK	3P(S1, S2, S3)	1	1		TB4	
20	T7W E11 255	CAPACITOR	2.0μF × 440V	1	1		C	
21	T7W E46 310	INDOOR CONTROLLER BOARD		1	1		I.B	
22	T7W E24 313	POWER BOARD		1	1		P.B	
23	R01 556 246	TERMINAL BLOCK	2P(1,2)	1			TB5	
24	R01 E58 202	CONDENSER / EVAPORATOR TEMPERATURE THERMISTOR		1	1		TH5	
25	T7W E05 202	ROOM TEMPERATURE THERMISTOR		1	1		TH1	
26	R01 E02 202	PIPE TEMPERATURE THERMISTOR		1	1		TH2	
27	T7W E06 130	MOTOR SUPPORT		1	1			

ELECTRICAL PARTS
PKA-A24FA PKA-A30FA PKA-A24FAL PKA-A30FAL

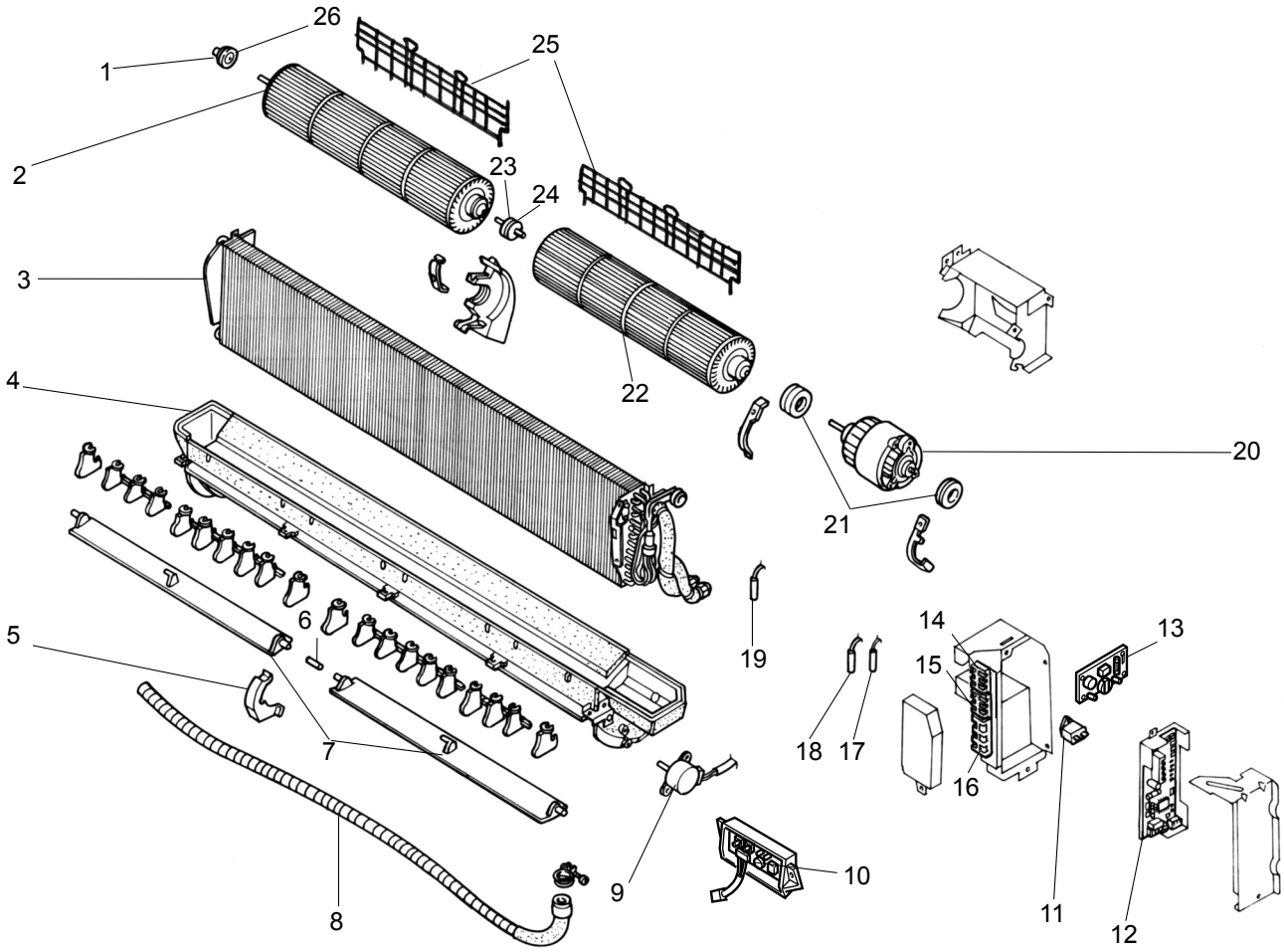

No.	Part No.	Part Name	Specification	Q'ty/set PKA-A 24FA	30FA	24FAL	30FAL	Remarks (Drawing No.)	Wiring Diagram Symbol	Recom-mended Q'ty
1	R01 Z61 102	BEARING MOUNT		1	1	1	1			
2	R01 E23 114	LEFT LINEFLOW FAN		1	1	1	1			
3	T7W H25 480	HEAT EXCHANGER		1		1				
	T7W H26 480	HEAT EXCHANGER			1		1			
4	T7W E13 529	DRAIN PAN		1	1	1	1			
5	R01 12G 621	CENTER COVER		1	1	1	1			
6	R01 12G 063	JOINT SHAFT		1	1	1	1			
7	R01 12G 002	AUTO VANE		2	2	2	2			
8	R01 KV5 527	DRAIN HOSE		1	1	1	1			
9	R01 E02 223	VANE MOTOR		1	1	1	1		MV	
10	R01 E03 317	WIRELESS ADAPTER CONTROLLER BOARD				1	1		W.B	
11	T7W E03 255	CAPACITOR	2.5μF 440V	1	1	1	1		C	
12	T7W E46 310	INDOOR CONTROLLER BOARD		1	1	1	1		I.B	

Continued to the next page

From the previous page

No.	Part No.	Part Name	Specification	Q'ty/set PKA-A 24FA	30FA	24FAL	30FAL	Remarks (Drawing No.)	Wiring Diagram Symbol	Recom-mended Q'ty
13	T7W E24 313	INDOOR POWER BOARD		1	1	1	1		P.B	
14	R01 556 246	TERMINAL BLOCK	2P(1, 2)	1	1				TB5	
15	R01 E13 246	TERMINAL BLOCK	3P(S1, S2, S3)	1	1	1	1		TB4	
16	T7W E11 716	TERMINAL BLOCK	3P(L1, L2, GR)	1	1	1	1		TB2	
17	T7W E12 202	ROOM TEMPERATURE THERMISTOR		1	1	1	1		TH1	
18	R01 E34 202	CONDENSER / EVAPORATOR TEMPERATURE THERMISTOR		1	1	1	1		TH5	
19	R01 E02 202	PIPE TEMPERATURE THERMISTOR		1	1	1	1		TH2	
20	T7W B00 762	FAN MOTOR	PN4N45-K	1	1	1	1		MF	
21	R01 12G 105	RUBBER MOUNT		2	2	2	2			
22	R01 E04 115	RIGHT LINEFLOW FAN		1	1	1	1			
23	R01 KV5 102	BEARING MOUNT		1	1	1	1			
24	R01 12G 103	SLEEVE BEARING		1	1	1	1			
25	T7W B02 675	FAN GUARD		2	2	2	2			
26	R01 005 103	SLEEVE BEARING		1	1	1	1			

ELECTRICAL PARTS
PKA-A36FA PKA-A36FAL

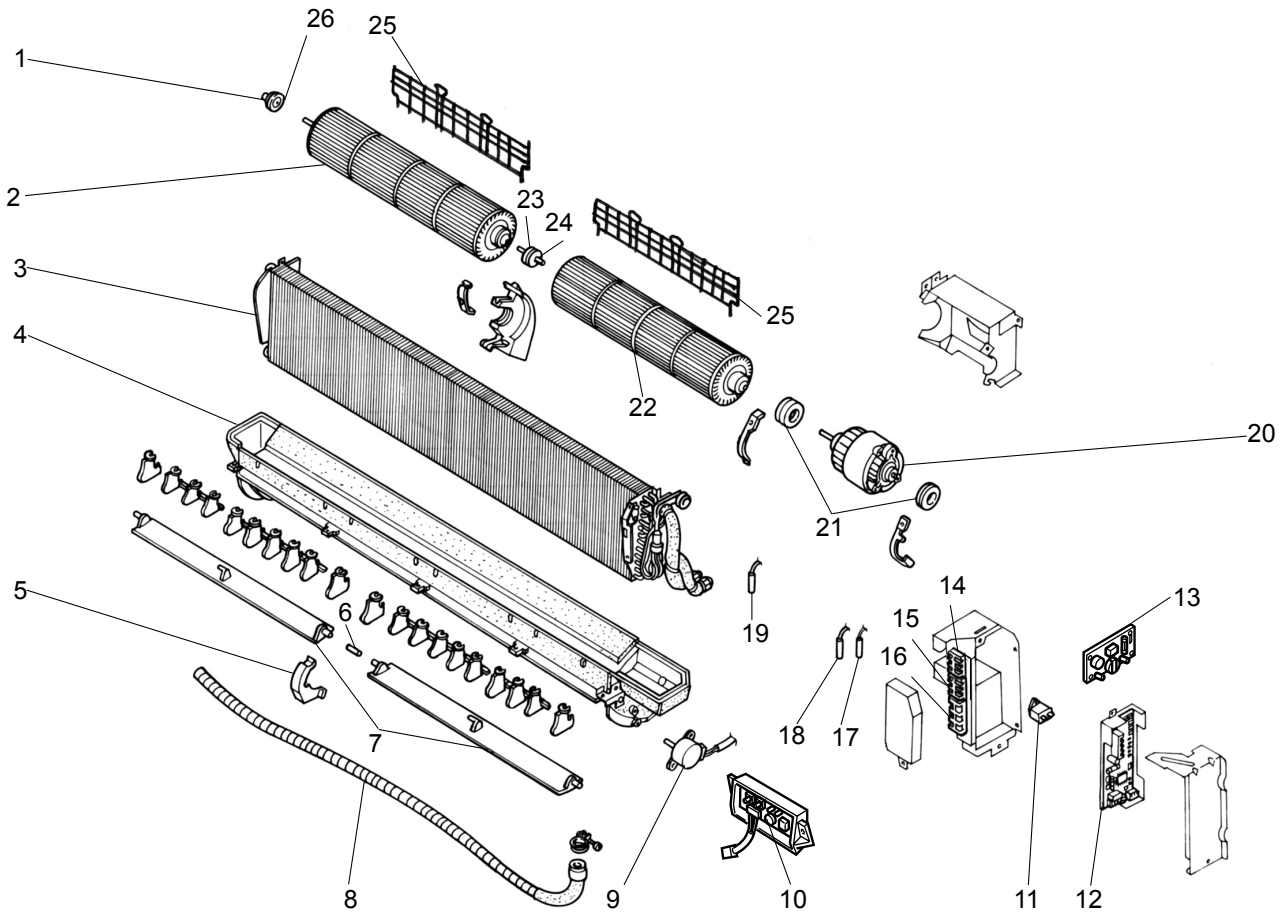

No.	Part No.	Part Name	Specification	Q'ty/set PKA-A 36FA	Q'ty/set PKA-A 36FAL	Remarks (Drawing No.)	Wiring Diagram Symbol	Recom-mended Q'ty
1	R01 Z61 102	BEARING MOUNT		1	1			
2	R01 16G 114	LEFT LINEFLOW FAN		1	1			
3	T7W H27 480	HEAT EXCHANGER		1	1			
4	T7W E14 529	DRAIN PAN		1	1			
5	R01 12G 621	CENTER COVER		1	1			
6	R01 12G 063	JOINT SHAFT		1	1			
7	R01 16G 002	AUTO VANE		2	2			
8	R01 KV5 527	DRAIN HOSE		1	1			
9	R01 E05 223	VANE MOTOR		1	1		MV	
10	R01 E03 317	WIRELESS ADAPTER CONTROLLER BOARD			1		W.B	
11	T7W E03 255	CAPACITOR	2.5F 440V	1	1		C	
12	T7W E46 310	INDOOR CONTROLLER BOARD		1	1		I.B	

Continued to the next page

From the previous page

No.	Part No.	Part Name	Specification	Q'ty/set PKA-A 36FA	Q'ty/set PKA-A 36FAL	Remarks (Drawing No.)	Wiring Diagram Symbol	Recom-mended Q'ty
13	T7W E24 313	INDOOR POWER BOARD		1	1		P.B	
14	R01 556 246	TERMINAL BLOCK	2P(1, 2)	1			TB5	
15	R01 E13 246	TERMINAL BLOCK	3P(S1, S2, S3)	1	1		TB4	
16	T7W E11 716	TERMINAL BLOCK	3P(L1,L2,GR)	1	1		TB2	
17	T7W E12 202	ROOM TEMPERATURE THERMISTOR		1	1		TH1	
18	R01 E34 202	CONDENSER / EVAPORATOR TEMPERATURE THERMISTOR		1	1		TH5	
19	R01 E02 202	PIPE TEMPERATURE THERMISTOR		1	1		TH2	
20	T7W B01 762	FAN MOTOR	PN4N70-K	1	1		MF	
21	R01 16G 105	RUBBER MOUNT		2	2			
22	R01 16G 115	RIGHT LINEFLOW FAN		1	1			
23	R01 KV5 102	BEARING MOUNT		1	1			
24	R01 12G 103	SLEEVE BEARING		1	1			
25	T7W B03 675	FAN GUARD		2	2			
26	R01 005 103	SLEEVE BEARING		1	1			

STRUCTURAL PARTS
PKA-A12GA
PKA-A18GA
PKA-A12GAL
PKA-A18GAL

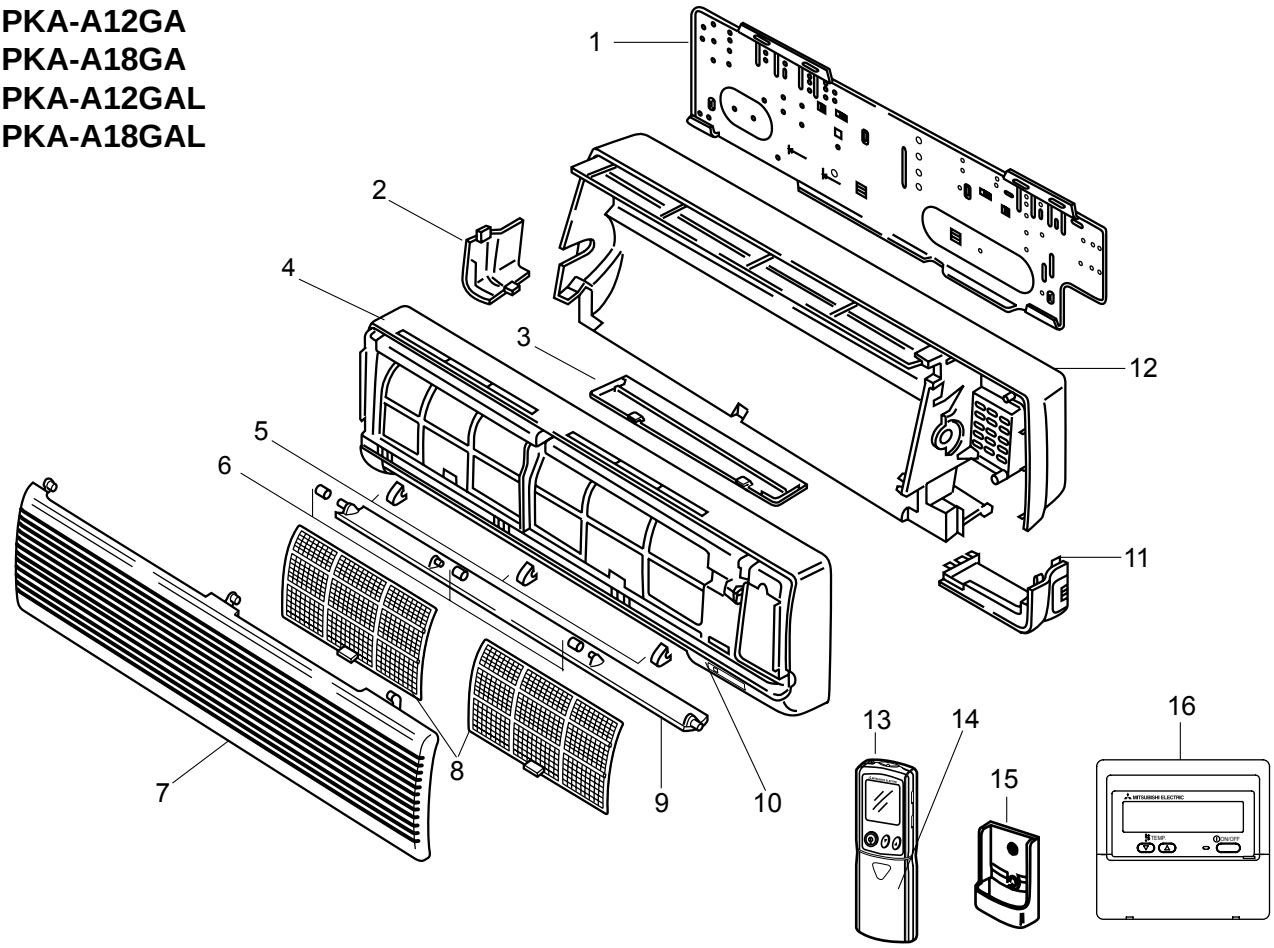

No.	Parts No.	Parts Name	Specifications	Q'ty/set PKA-A 12, 18GA	Q'ty/set PKA-A 12, 18GAL	Remarks (Drawing No.)	Wiring Diagram Symbol	Recom-mended Q'ty
1	R01 07Y 808	BACK PLATE		1	1			
2	R01 09Y 658	CORNER COVER		1	1			
3	R01 07Y 623	UNDER COVER		1	1			
4	R01 E05 651	FRONT PANEL		1	1			
5	R01 07Y 096	SCREW CAP		3	3			
6	R01 07Y 092	VANE SLEEVE		1	1			
7	R01 07Y 691	FRONT GRILLE		1	1			
8	R01 A16 500	AIR FILTER		2	2			
9	R01 07Y 002	AUTO VANE		1	1			
10	R01 24K 658	RECEIVING UNIT			1		RU	
11	R01 07Y 658	CORNER COVER		1	1			
12	R01 07Y 635	BOX ASSEMBLY		1	1			
13	T7W E09 714	WIRELESS REMOTE CONTROLLER			1			
14	R01 E01 049	WIRELESS REMOTE CONTROLLER DOOR			1			
15	R01 E00 075	WIRELESS REMOTE CONTROLLER HOLDER			1			
16	T7W E10 713	WIRED REMOTE CONTROLLER		1			R.B	

STRUCTURAL PARTS
PKA-A24FA PKA-A30FA
PKA-A24FAL PKA-A30FAL

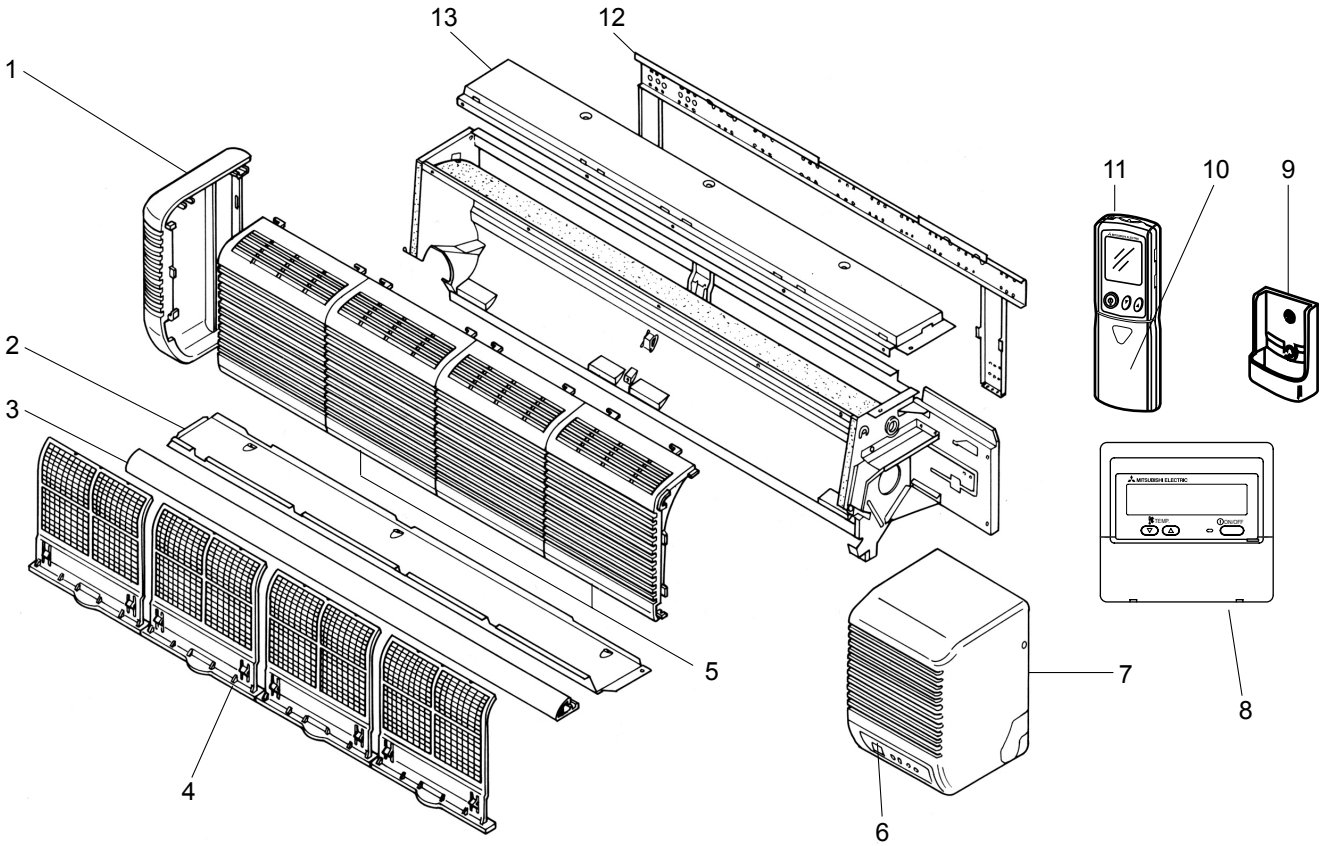

Part number that is circled is not shown in the figure.

No.	Part No.	Part Name	Specifications	Q'ty/set PKA-A 24, 30FA	Q'ty/set PKA-A 24, 30FAL	Remarks (Drawing No.)	Wiring Diagram Symbol	Recom-mended Q'ty
1	R01 12G 662	LEFT SIDE PANEL		1	1			
2	R01 E01 812	UNDER PLATE		1	1			
3	R01 E00 811	NOSE		1	1			
4	R01 A17 500	AIR FILTER		4	4			
5	R01 12G 691	INTAKE GRILLE		2	2			
6	R01 24K 658	RECEIVER			1		RU	
7	R01 12G 661	RIGHT SIDE PANEL		1				
	T7W E05 661	RIGHT SIDE PANEL			1			
8	T7W E10 713	WIRED REMOTE CONTROLLER		1			R.B	
9	R01 E00 075	WIRELESS REMOTE CONTROLLER HOLDER			1			
10	R01 E01 049	WIRELESS REMOTE CONTROLLER DOOR			1			
11	T7W E08 714	WIRELESS REMOTE CONTROLLER			1			
12	R01 12G 808	BACK PLATE		1	1			
13	R01 E01 641	TOP PLATE		1	1			
⑭	R01 12G 523	DRAIN SOCKET		1	1			

STRUCTURAL PARTS
PKA-A36FA PKA-A36FAL

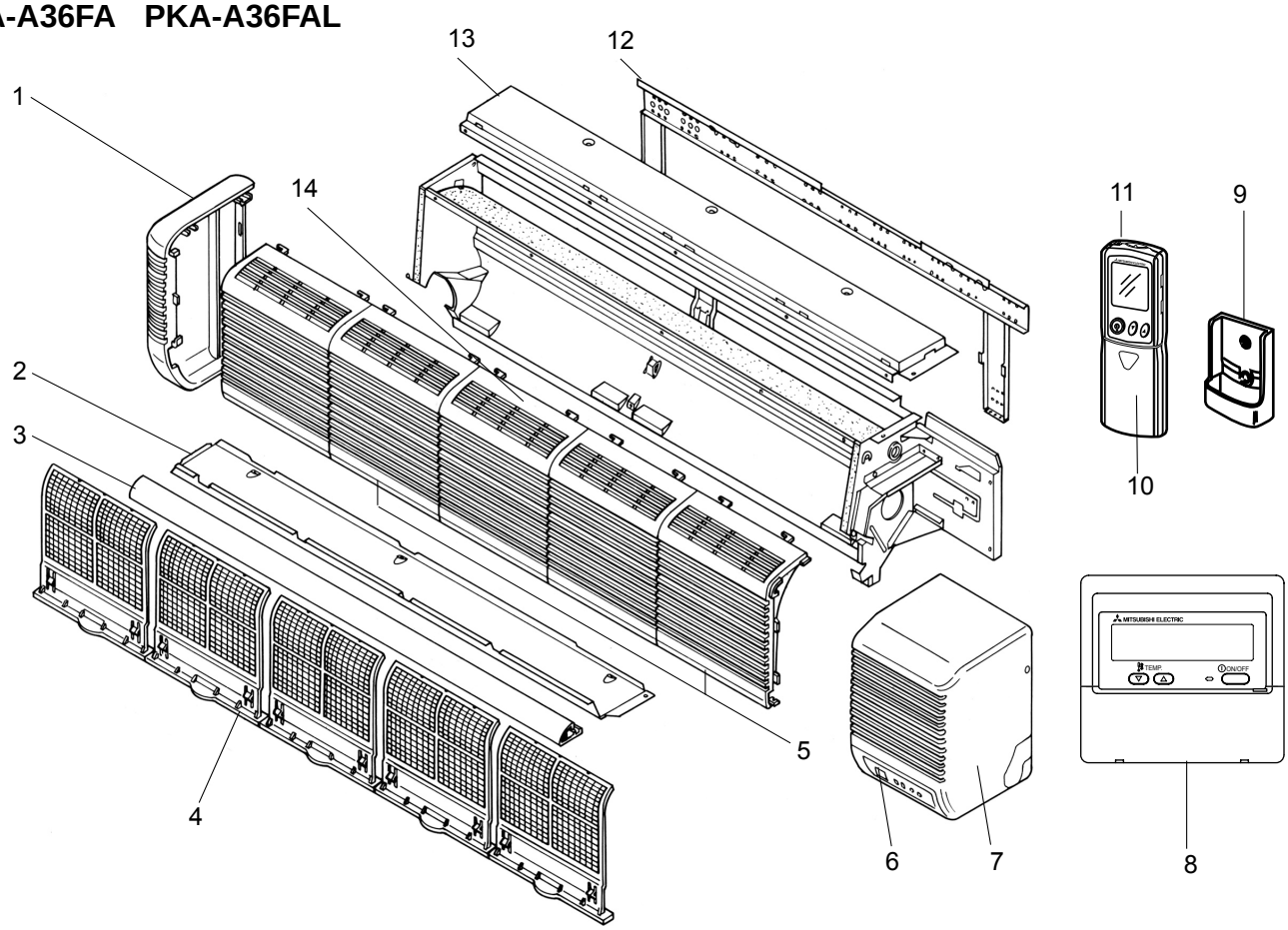

Part number that is circled is not shown in the figure.

No.	Part No.	Part Name	Specification	Q'ty/set PKA-A 36FA	Q'ty/set PKA-A 36FAL	Remarks (Drawing No.)	Wiring Diagram Symbol	Recom-mended Q'ty
1	R01 12G 662	LEFT SIDE PANEL		1	1			
2	R01 E00 812	UNDER PLATE		1	1			
3	R01 E01 811	NOSE		1	1			
4	R01 A17 500	AIR FILTER		5	5			
5	R01 12G 691	INTAKE GRILLE		2	2			
6	R01 24K 658	RECEIVER			1		RU	
7	R01 12G 661	RIGHT SIDE PANEL		1				
	T7W E05 661	RIGHT SIDE PANEL			1			
8	T7W E10 713	WIRED REMOTE CONTROLLER		1			R.B	
9	R01 E00 075	WIRELESS REMOTE CONTROLLER HOLDER			1			
10	R01 E01 049	WIRELESS REMOTE CONTROLLER DOOR			1			
11	T7W E08 714	WIRELESS REMOTE CONTROLLER			1			
12	R01 16G 808	BACK PLATE		1	1			
13	R01 E00 641	TOP PLATE		1	1			
14	R01 16G 692	INTAKE GRILLE		1	1			
15	R01 12G 523	DRAIN SOCKET		1	1			

14 RoHS PARTS LIST

STRUCTURAL PARTS

PKA-A12GA$_1$ PKA-A12GA$_2$
PKA-A18GA$_1$ PKA-A18GA$_2$
PKA-A12GAL$_1$ PKA-A12GAL$_2$
PKA-A18GAL$_1$ PKA-A18GAL$_2$

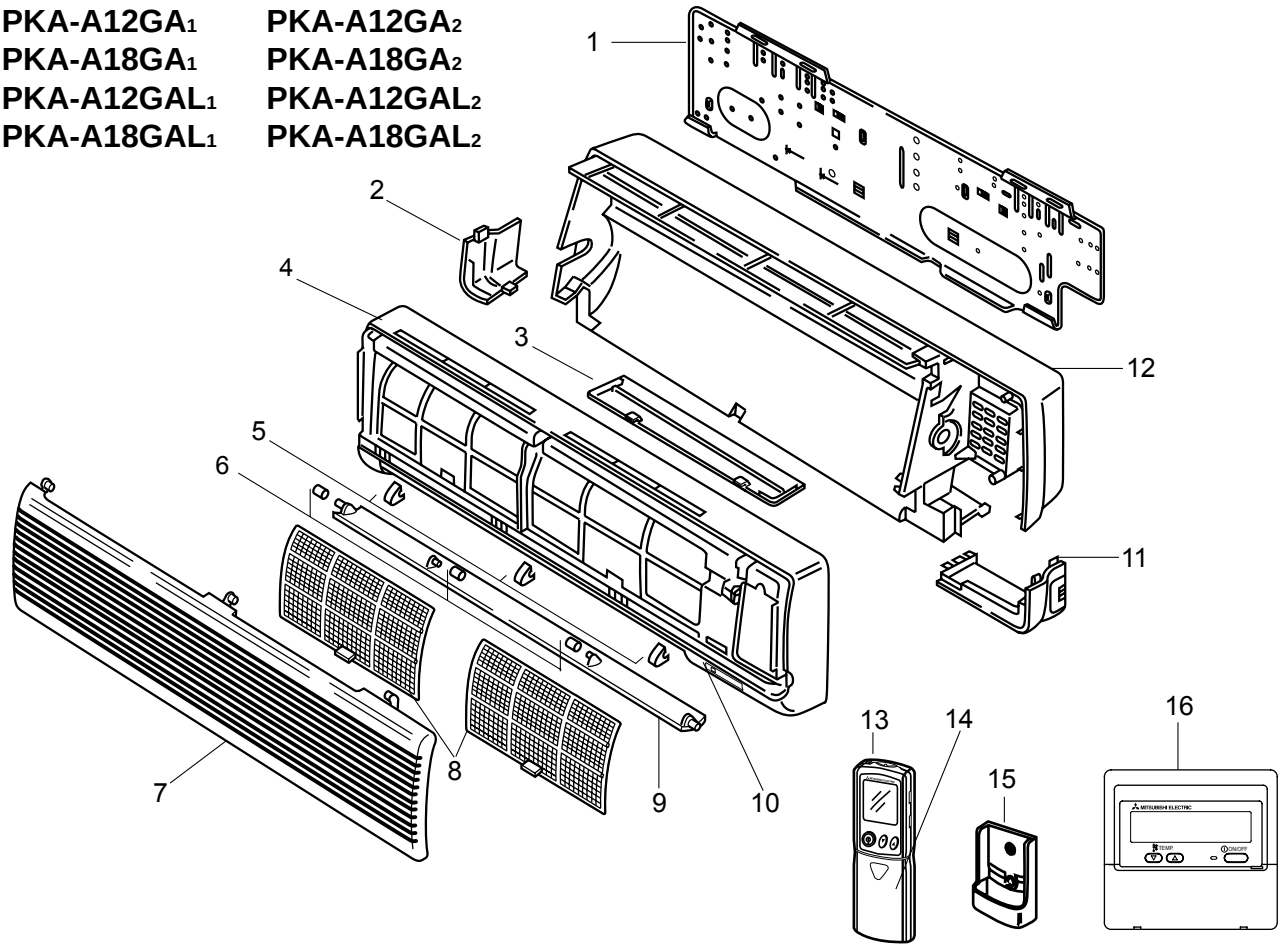

No.	RoHS	Parts No.	Parts Name	Specifications	Q'ty/set PKA-A12/18 GA$_1$/GA$_2$	Q'ty/set PKA-A12/18 GAL$_1$/GAL$_2$	Remarks (Drawing No.)	Wiring Diagram Symbol	Recom-mended Q'ty
1	G	R01 08Y 808	BACK PLATE		1	1			
2	G	R01 08Y 658	CORNER COVER		1	1			
3	G	R01 08Y 623	UNDER COVER		1	1			
4	G	R01 E05 651	FRONT PANEL		1	1			
5	G	R01 08Y 096	SCREW CAP		3	3			
6	G	R01 08Y 092	VANE SLEEVE		1	1			
7	G	R01 08Y 691	FRONT GRILLE		1	1			
8	G	R01 A32 500	AIR FILTER		2	2			
9	G	R01 08Y 002	AUTO VANE		1	1			
10	G	R01 E18 658	RECEIVING UNIT			1		RU	
11	G	R01 10Y 658	CORNER COVER		1	1			
12	G	R01 08Y 635	BOX ASSEMBLY		1	1			
13	G	T7W E09 714	WIRELESS REMOTE CONTROLLER			1			
14	G	R01 E03 049	WIRELESS REMOTE CONTROLLER DOOR			1			
15	G	R01 E00 075	WIRELESS REMOTE CONTROLLER HOLDER			1			
16	G	T7W E14 713	WIRED REMOTE CONTROLLER		1			R.B	

STRUCTURAL PARTS

PKA-A24FA1 PKA-A30FA1
PKA-A24FAL1 PKA-A30FAL1
PKA-A24FA2 PKA-A30FA2
PKA-A24FAL2 PKA-A30FAL2

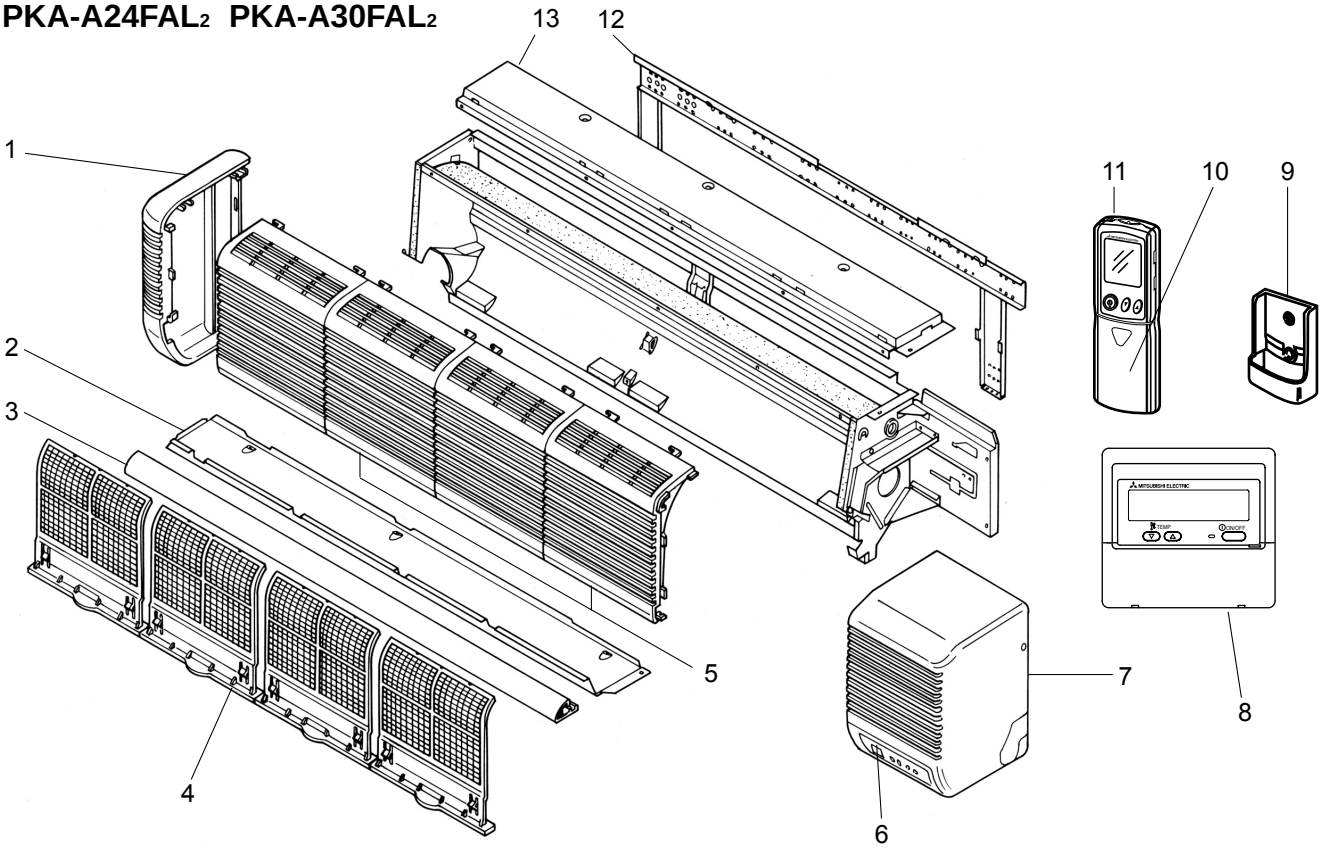

Part number that is circled is not shown in the figure.

No.	RoHS	Part No.	Part Name	Specifications	Q'ty/set PKA-A24/30 FA1/FA2	Q'ty/set PKA-A24/30 FAL1/FAL2	Remarks (Drawing No.)	Wiring Diagram Symbol	Recom-mended Q'ty
1	G	R01 14G 662	LEFT SIDE PANEL		1	1			
2	G	R01 E02 812	UNDER PLATE		1	1			
3	G	R01 E00 811	NOSE		1	1			
4	G	R01 A17 500	AIR FILTER		4	4			
5	G	R01 17G 691	INTAKE GRILLE		2	2			
6	G	R01 E18 658	RECEIVER			1		RU	
7	G	R01 14G 661	RIGHT SIDE PANEL		1				
	G	T7W E18 661	RIGHT SIDE PANEL			1			
8	G	T7W E14 713	WIRED REMOTE CONTROLLER		1			R.B	
9	G	R01 E00 075	WIRELESS REMOTE CONTROLLER HOLDER			1			
10	G	R01 E03 049	WIRELESS REMOTE CONTROLLER DOOR			1			
11	G	T7W E08 714	WIRELESS REMOTE CONTROLLER			1			
12	G	R01 E03 808	BACK PLATE		1	1			
13	G	R01 E19 641	TOP PLATE		1	1			
14	G	R01 E02 523	DRAIN SOCKET		1	1			

STRUCTURAL PARTS

PKA-A36FA1 PKA-A36FAL1 PKA-A36FA2 PKA-A36FAL2

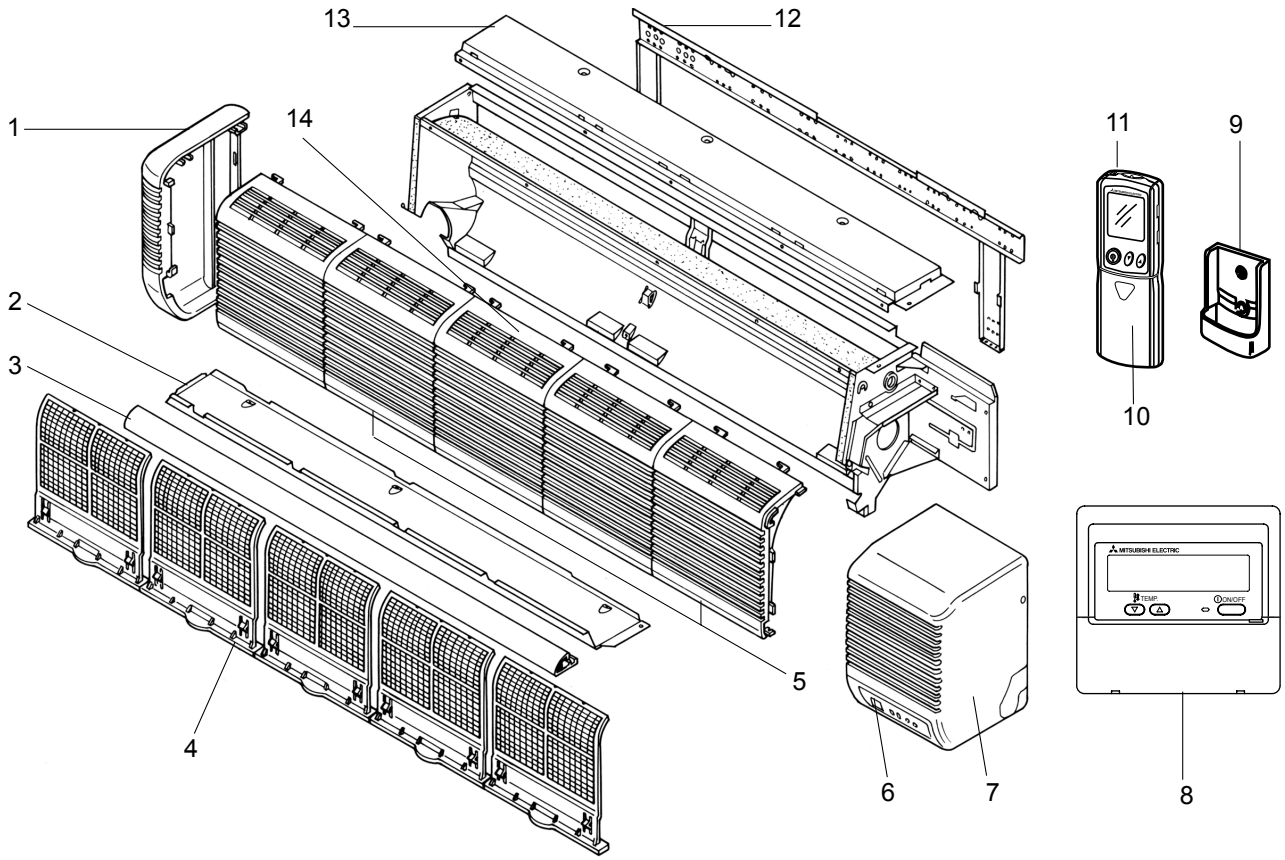

Part number that is circled is not shown in the figure.

No.	RoHS	Part No.	Part Name	Specification	Q'ty/set PKA-A36		Remarks (Drawing No.)	Wiring Diagram Symbol	Recom-mended Q'ty
					FA_1/FA_2	FAL_1/FAL_2			
1	G	R01 14G 662	LEFT SIDE PANEL		1	1			
2	G	R01 E03 812	UNDER PLATE		1	1			
3	G	R01 E01 811	NOSE		1	1			
4	G	R01 A17 500	AIR FILTER		5	5			
5	G	R01 17G 691	INTAKE GRILLE		2	2			
6	G	R01 E18 658	RECEIVER			1		RU	
7	G	R01 14G 661	RIGHT SIDE PANEL		1				
	G	T7W E18 661	RIGHT SIDE PANEL			1			
8	G	T7W E14 713	WIRED REMOTE CONTROLLER		1			R.B	
9	G	R01 E00 075	WIRELESS REMOTE CONTROLLER HOLDER			1			
10	G	R01 E03 049	WIRELESS REMOTE CONTROLLER DOOR			1			
11	G	T7W E08 714	WIRELESS REMOTE CONTROLLER			1			
12	G	R01 E04 808	BACK PLATE		1	1			
13	G	R01 E20 641	TOP PLATE		1	1			
14	G	R01 18G 692	INTAKE GRILLE		1	1			
15	G	R01 E02 523	DRAIN SOCKET		1	1			

ELECTRICAL PARTS

PKA-A12GA$_1$ PKA-A12GAL$_1$ PKA-A12GA$_2$ PKA-A12GAL$_2$
PKA-A18GA$_1$ PKA-A18GAL$_1$ PKA-A18GA$_2$ PKA-A18GAL$_2$

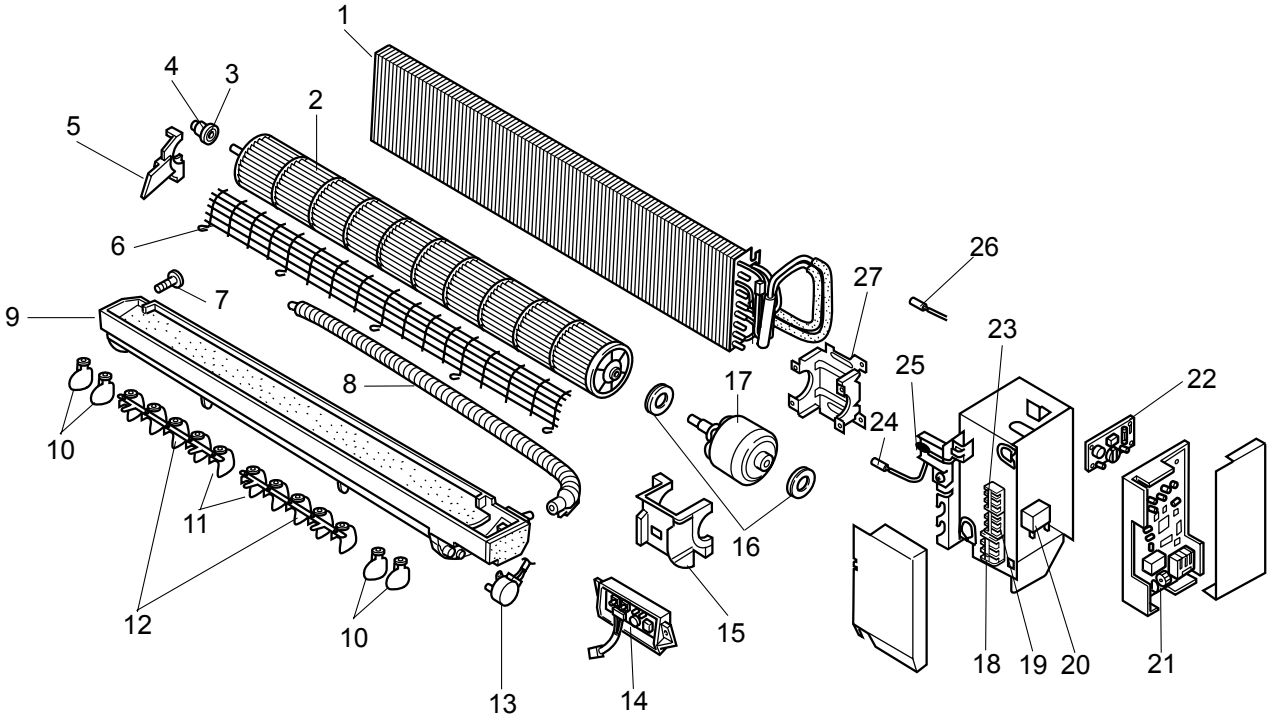

Part number that is circled is not shown in the figure.

No.	RoHS	Parts No.	Parts Name	Specifications	Q'ty/set PKA-A12,18 GA$_1$	GAL$_1$	GA$_2$	GAL$_2$	Remarks (Drawing No.)	Wiring Diagram Symbol	Recom-mended Q'ty
1	G	T7W H28 480	HEAT EXCHANGER		1	1	1	1			
2	G	R01 E22 114	LINE FLOW FAN		1	1	1	1			
3	G	R01 08Y 102	BEARING MOUNT		1	1	1	1			
4	G	R01 E04 103	SLEEVE BEARING		1	1	1	1			
5	G	R01 08Y 106	BEARING SUPPORT		1	1	1	1			
6	G	T7W A01 675	FAN GUARD		1	1	1	1			
7	G	R01 08Y 524	DRAIN PLUG		1	1	1	1			
8	G	R01 08Y 527	DRAIN HOSE		1	1	1	1			
9	G	R01 08Y 530	NOZZLE		1	1	1	1			
10	G	R01 10Y 038	GUIDE VANE		4	4	4	4			
11	G	R01 08Y 038	GUIDE VANE		10	10	10	10			
12	G	R01 08Y 059	ARM		2	2	2	2			
13	G	R01 E14 223	VANE MOTOR		1	1	1	1		MV	
14	G	R01 E06 317	WIRERLESS ADAPTER CONTROLLER BOARD			1		1		W.B	
15	G	R01 08Y 135	MOTOR COVER		1	1	1	1			
16	G	R01 08Y 105	RUBBER MOUNT		2	2	2	2			
17	G	T7W E30 762	FAN MOTOR	PM4V30-K	1	1	1	1		MF	

Continued to the next page

From the previous page

No.	RoHS	Parts No.	Parts Name	Specifications	Q'ty/set PKA-A12,18				Remarks (Drawing No.)	Wiring Diagram Symbol	Recom-mended Q'ty
					GA_1	GAL_1	GA_2	GAL_2			
18	G	T7W E41 716	TERMINAL BLOCK	3P(L1, L2, GR)	1	1				TB2	
19	G	R01 E18 246	TERMINAL BLOCK	3P(S1, S2, S3)	1	1	1	1		TB4	
20	G	T7W E17 255	CAPACITOR	2.0μF × 440V	1	1	1	1		C	
21	G	T7W E56 310	INDOOR CONTROLLER BOARD		1	1				I.B	
	G	T7W E70 310	INDOOR CONTROLLER BOARD				1	1		I.B	
22	G	T7W E35 313	POWER BOARD		1	1	1	1		P.B	
23	G	R01 E21 246	TERMINAL BLOCK	2P(1,2)	1					TB5	
	G	T7W E46 716	TERMINAL BLOCK	2P(1,2)			1			TB5	
24	G	R01 H11 202	CONDENSER/EVAPORATOR TEMPERATURE THERMISTOR		1	1	1	1		TH5	
25	G	R01 H08 202	ROOM TEMPERATURE THERMISTOR		1	1				TH1	
	G	T7W E05 202	ROOM TEMPERATURE THERMISTOR				1	1		TH1	
26	G	R01 H05 202	PIPE TEMPERATURE THERMISTOR		1	1	1	1		TH2	
27	G	T7W E10 130	MOTOR SUPPORT		1	1	1	1			
28	G	R01 E06 239	FUSE	6.3A 250V	1	1	1	1		FUSE	

ELECTRICAL PARTS

PKA-A24FA$_1$ PKA-A30FA$_1$ PKA-A24FAL$_1$ PKA-A30FAL$_1$
PKA-A24FA$_2$ PKA-A30FA$_2$ PKA-A24FAL$_2$ PKA-A30FAL$_2$

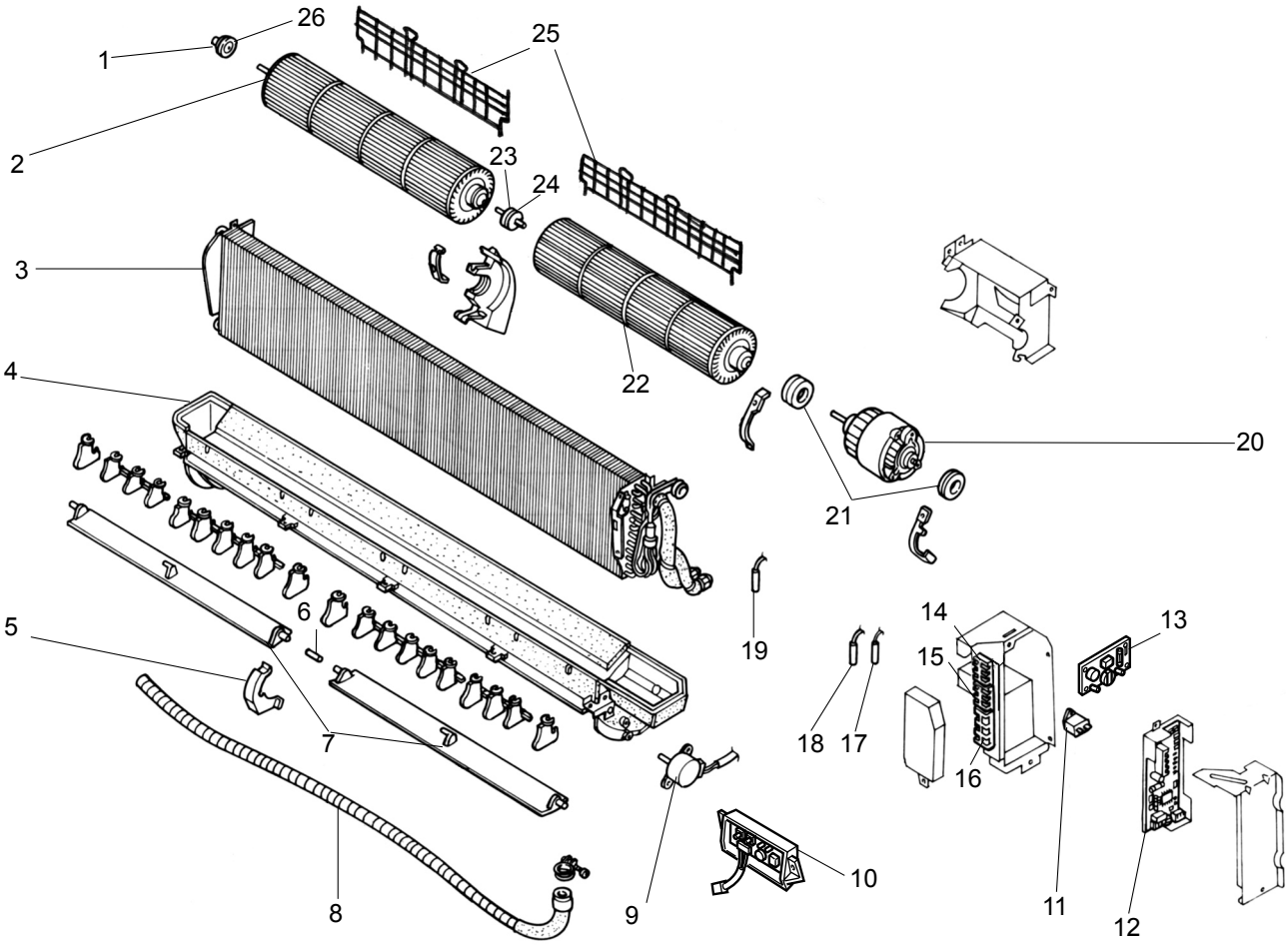

Part number that is circled is not shown in the figure.

No.	RoHS	Part No.	Part Name	Specification	Q'ty/set PKA-A 24 FA$_1$	30 FA$_1$	24 FAL$_1$	30 FAL$_1$	24 FA$_2$	30 FA$_2$	24 FAL$_2$	30 FAL$_2$	Remarks (Drawing No.)	Wiring Diagram Symbol	Recom-mended Q'ty
1	G	R01 Z61 102	BEARING MOUNT		1	1	1	1	1	1	1	1			
2	G	R01 E23 114	LEFT LINEFLOW FAN		1	1	1	1	1	1	1	1			
3	G	T7W H25 480	HEAT EXCHANGER		1		1		1		1				
	G	T7W H26 480	HEAT EXCHANGER			1		1		1		1			
4	G	T7W E24 529	DRAIN PAN		1	1	1	1	1	1	1	1			
5	G	R01 14G 621	CENTER COVER		1	1	1	1	1	1	1	1			
6	G	R01 13G 063	JOINT SHAFT		1	1	1	1	1	1	1	1			
7	G	R01 18G 002	AUTO VANE		2	2	2	2	2	2	2	2			
8	G	R01 E04 527	DRAIN HOSE		1	1	1	1	1	1	1	1			
9	G	R01 E15 223	VANE MOTOR		1	1	1	1	1	1	1	1		MV	
10	G	R01 E06 317	WIRELESS ADAPTER CONTROLLER BOARD				1	1			1	1		W.B	
11	G	T7W E16 255	CAPACITOR	2.5μF 440V	1	1	1	1	1	1	1	1		C	
12	G	T7W E56 310	INDOOR CONTROLLER BOARD		1	1	1	1						I.B	
	G	T7W E70 310	INDOOR CONTROLLER BOARD						1	1	1	1		I.B	

Continued to the next page

From the previous page

No.	RoHS	Part No.	Part Name	Specification	Q'ty/set PKA-A 24 FA1	30 FA1	24 FAL1	30 FAL1	24 FA2	30 FA2	24 FAL2	30 FAL2	Remarks (Drawing No.)	Wiring Diagram Symbol	Recom-mended Q'ty
13	G	T7W E35 313	INDOOR POWER BOARD		1	1	1	1	1	1	1	1		P.B	
14	G	T7W E46 716	TERMINAL BLOCK	2P(1, 2)	1	1			1	1				TB5	
15	G	R01 E18 246	TERMINAL BLOCK	3P(S1, S2, S3)	1	1	1	1	1	1	1	1		TB4	
16	G	T7W E41 716	TERMINAL BLOCK	3P(L1, L2, GR)	1	1	1	1						TB2	
17	G	R01 H06 202	ROOM TEMPERATURE THERMISTOR		1	1	1	1	1	1	1	1		TH1	
18	G	R01 H07 202	CONDENSER / EVAPORATOR TEMPERATURE THERMISTOR		1	1	1	1	1	1	1	1		TH5	
19	G	R01 H05 202	PIPE TEMPERATURE THERMISTOR	PN4N45-K	1	1	1	1	1	1	1	1		TH2	
20	G	T7W B05 762	FAN MOTOR		1	1	1	1	1	1	1	1		MF	
21	G	R01 12G 105	RUBBER MOUNT		2	2	2	2	2	2	2	2			
22	G	R01 E04 115	RIGHT LINEFLOW FAN		1	1	1	1	1	1	1	1			
23	G	R01 KV5 102	BEARING MOUNT		1	1	1	1	1	1	1	1			
24	G	R01 E03 103	SLEEVE BEARING		1	1	1	1	1	1	1	1			
25	G	T7W E15 675	FAN GUARD		2	2	2	2	2	2	2	2			
26	G	R01 E04 103	SLEEVE BEARING		1	1	1	1	1	1	1	1			
27	G	R01 E06 239	FUSE	6.3A 250V	1	1	1	1	1	1	1	1		FUSE	

ELECTRICAL PARTS
PKA-A36FA1 PKA-A36FAL1 PKA-A36FA2 PKA-A36FAL2

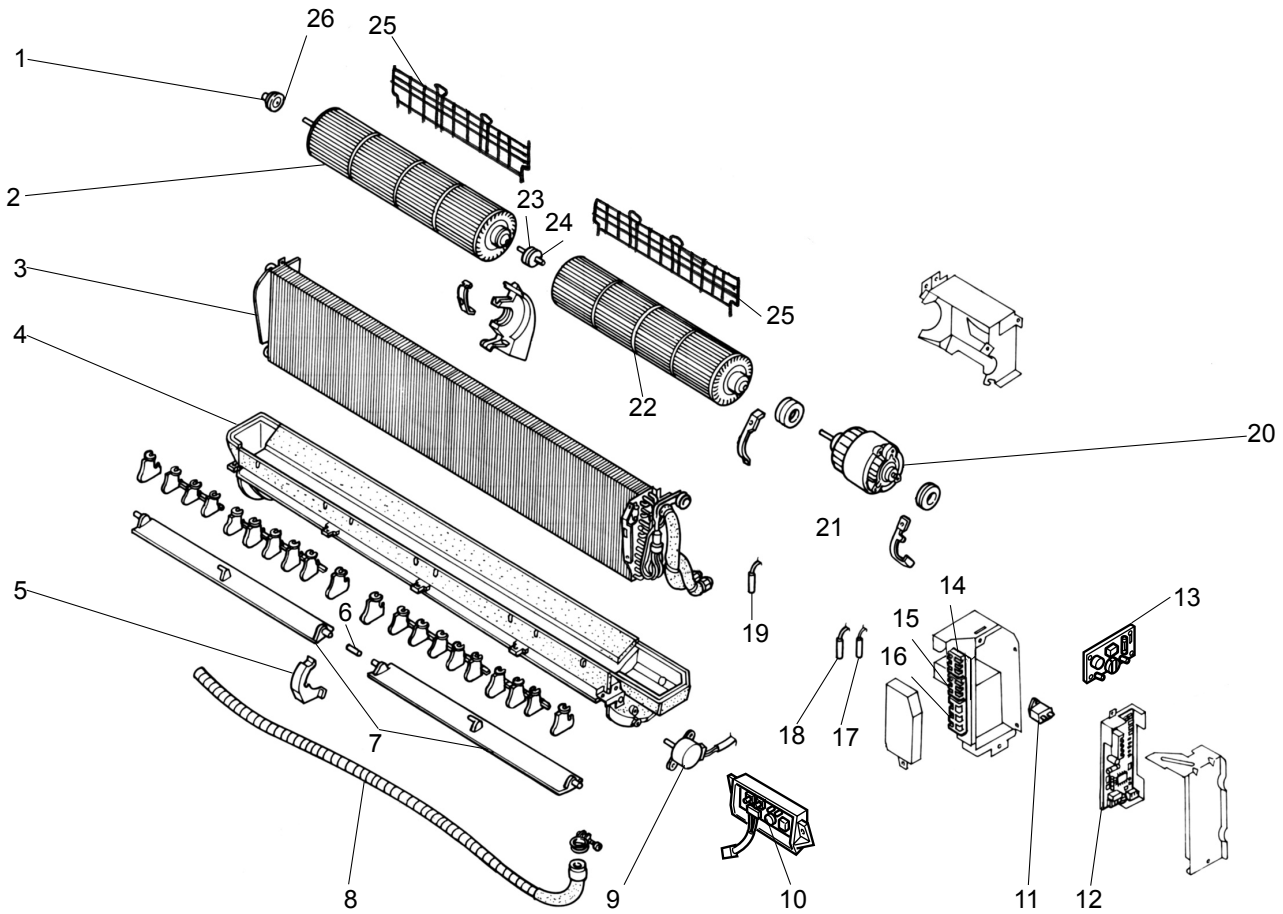

Part number that is circled is not shown in the figure.

No.	RoHS	Part No.	Part Name	Specification	Q'ty/set PKA-A36 FA1	FAL1	FA2	FAL2	Remarks (Drawing No.)	Wiring Diagram Symbol	Recom-mended Q'ty
1	G	R01 Z61 102	BEARING MOUNT		1	1	1	1			
2	G	R01 19G 114	LEFT LINEFLOW FAN		1	1	1	1			
3	G	T7W H27 480	HEAT EXCHANGER		1	1	1	1			
4	G	T7W E25 529	DRAIN PAN		1	1	1	1			
5	G	R01 14G 621	CENTER COVER		1	1	1	1			
6	G	R01 13G 063	JOINT SHAFT		1	1	1	1			
7	G	R01 19G 002	AUTO VANE		2	2	2	2			
8	G	R01 E04 527	DRAIN HOSE		1	1	1	1			
9	G	R01 E15 223	VANE MOTOR		1	1	1	1		MV	
10	G	R01 E06 317	WIRELESS ADAPTER CONTROLLER BOARD			1		1		W.B	
11	G	T7W E16 255	CAPACITOR	2.5F 440V	1	1	1	1		C	
12	G	T7W E56 310	INDOOR CONTROLLER BOARD		1	1				I.B	
	G	T7W E70 310	INDOOR CONTROLLER BOARD				1	1		I.B	

Continued to the next page

From the previous page

No.	RoHS	Part No.	Part Name	Specification	Q'ty/set PKA-A36 FA1	FAL1	FA2	FAL2	Remarks (Drawing No.)	Wiring Diagram Symbol	Recom-mended Q'ty
13	G	T7W E35 313	INDOOR POWER BOARD		1	1	1	1		P.B	
14	G	T7W E46 716	TERMINAL BLOCK	2P(1, 2)	1		1			TB5	
15	G	R01 E18 246	TERMINAL BLOCK	3P(S1, S2, S3)	1	1	1	1		TB4	
16	G	T7W E41 716	TERMINAL BLOCK	3P(L1,L2,GR)	1	1				TB2	
17	G	R01 H06 202	ROOM TEMPERATURE THERMISTOR		1	1	1	1		TH1	
18	G	R01 H07 202	CONDENSER / EVAPORATOR TEMPERATURE THERMISTOR		1	1	1	1		TH5	
19	G	R01 H05 202	PIPE TEMPERATURE THERMISTOR		1	1	1	1		TH2	
20	G	T7W B06 762	FAN MOTOR	PN4N70-K	1	1	1	1		MF	
21	G	R01 16G 105	RUBBER MOUNT		2	2	2	2			
22	G	R01 19G 115	RIGHT LINEFLOW FAN		1	1	1	1			
23	G	R01 KV5 102	BEARING MOUNT		1	1	1	1			
24	G	R01 E03 103	SLEEVE BEARING		1	1	1	1			
25	G	T7W E16 675	FAN GUARD		2	2	2	2			
26	G	R01 E04 103	SLEEVE BEARING		1	1	1	1			
㉗	G	R01 E06 239	FUSE	6.3A 250V	1	1	1	1		FUSE	

Mr.SLIM™

MITSUBISHI ELECTRIC CORPORATION
HEAD OFFICE : TOKYO BLDG., 2-7-3, MARUNOUCHI, CHIYODA-KU, TOKYO 100-8310, JAPAN

©Copyright 2006 MITSUBISHI ELECTRIC ENGINEERING CO., LTD.
Distributed in Apr. 2009 No.OC369 REVISED EDITION-D PDF 7
Distributed in Oct. 2007 No.OC369 REVISED EDITION-C PDF 9
Distributed in Jun. 2007 No.OC369 REVISED EDITION-B PDF 9
Distributed in Aug. 2006 No.OC369 REVISED EDITION-A PDF 9
Distributed in Feb. 2006 No.OC369 PDF 10

New publication, effective Apr. 2009
Specifications subject to change without notice.